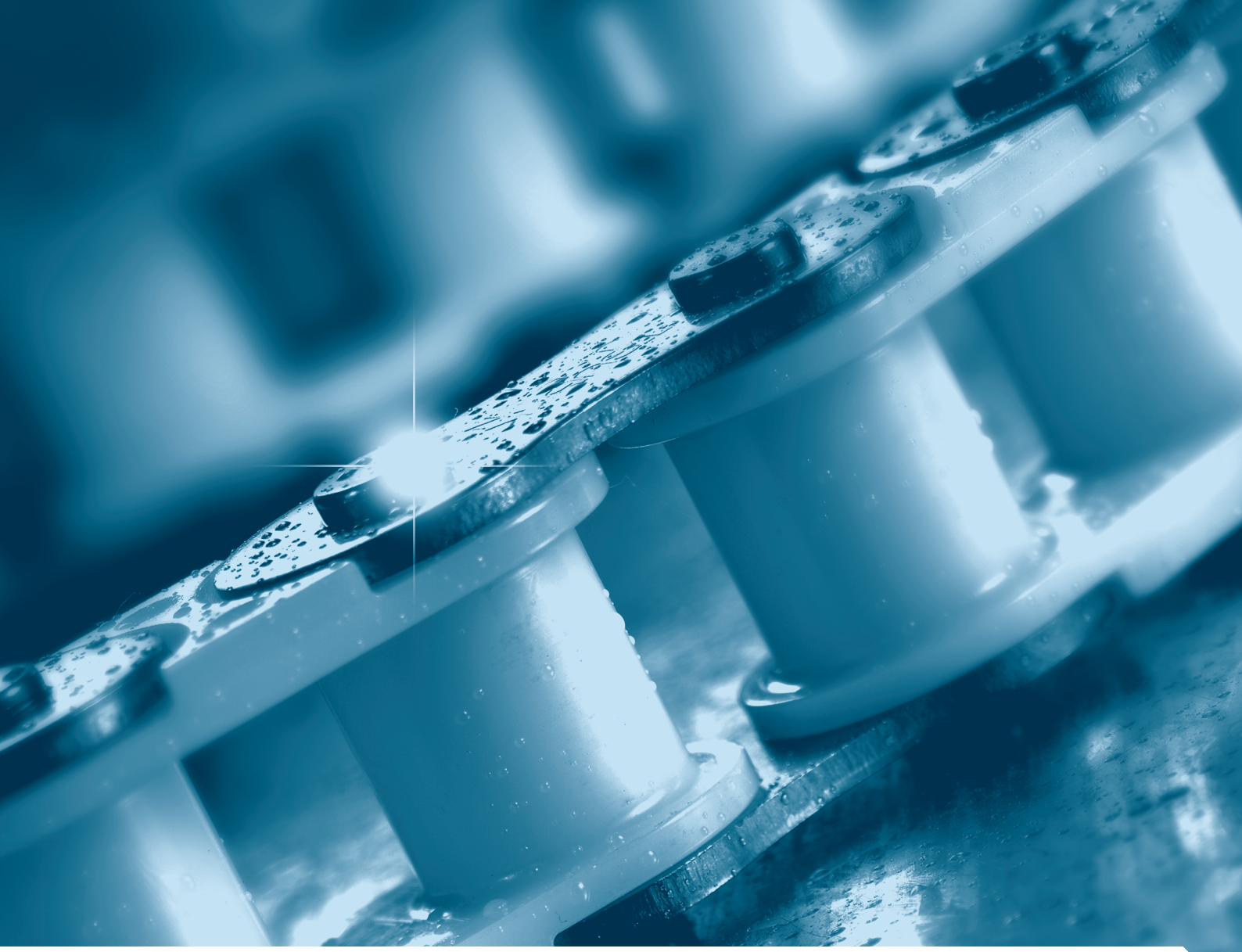

Innovation in Motion
TSUBAKI

ATTACHMENT CHAIN

CATALOGUE 2 | 2015

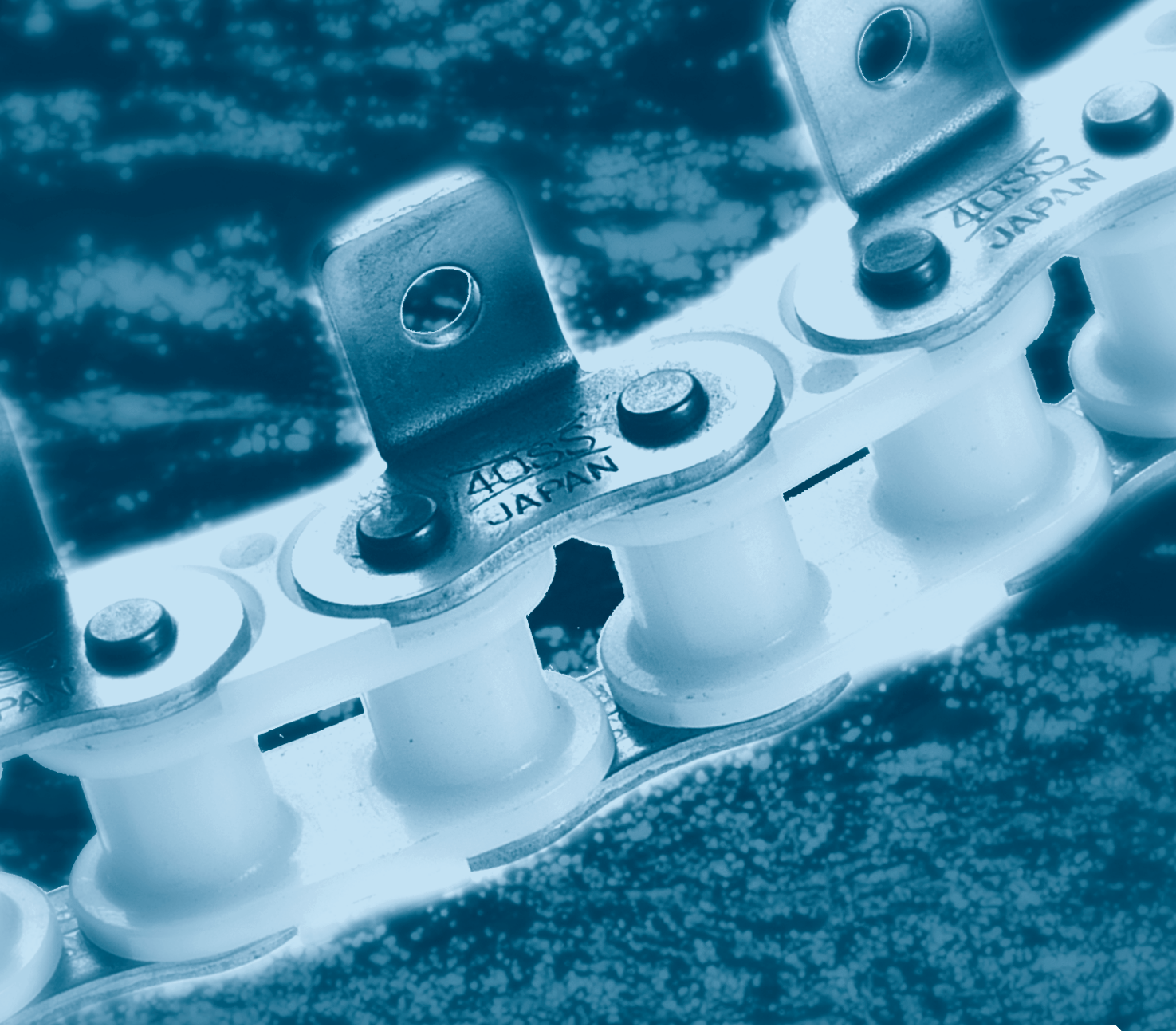

Innovation in Motion
TSUBAKI

CATALOGUE 2 ATTACHMENT CHAIN

Classification			Chain Series	Tsubaki Chain Type	Features
General			BS Standard Attachment Chain Series	BS Single Pitch Standard	All Major Chain Attachments Available
				BS Single Pitch RF	Straight Side Plate for Direct Conveying
			ANSI Standard Attachment Chain Series	ANSI Single Pitch Standard	All Major Chain Attachments Available
				ANSI Single Pitch HP	Hollow Pin Chain
				ANSI Single Pitch CU	Curved Chain (Side Bow Chain)
				ANSI Double Pitch Standard	For Longer Conveyor Lines
				ANSI Double Pitch HP	Hollow Pin Chain
Lube-Free			BS LAMBDA Attachment Chain Series	BS Single Pitch LAMBDA	Self Lube, Maintenance Free
				BS Single Pitch LAMBDA RF	Self Lube, Maintenance Free
			ANSI LAMBDA Attachment Chain Series	ANSI Single Pitch LAMBDA	Self Lube, Maintenance Free
				ANSI Single Pitch LAMBDA HP	Self Lube, Hollow Pin Chain
				ANSI Double Pitch LAMBDA	Self Lube, Maintenance Free
Anti Corrosion	Corrosion Protected	Carbon Steel Base	N.E.P. Attachment Chain Series	BS Single Pitch N.E.P.	Environmental Friendly Corrosion Protection
	Corrosion Resistant	Stainless Steel Base	SS Attachment Chain Series	BS Single Pitch SS	Stainless Steel SUS304
				ANSI Single Pitch SS	Stainless Steel SUS304
				ANSI Single Pitch SS HP	SUS304, Hollow Pin
				ANSI Double Pitch SS	SUS304, Double Pitch
				ANSI Double Pitch SS HP	SUS304, Double Pitch, Hollow Pin
			PC Attachment Chain Series	BS Single Pitch PC	SUS304+Engineering Plastic Inner Link
				ANSI Single Pitch PC	SUS304+Engineering Plastic Inner Link
		Plastic Base	P Attachment Chain Series	ANSI Single Pitch P	Engineering Plastic Block+SUS304 Pins



CATALOGUE 1 DRIVE CHAIN

Classification			Chain Series	Tsubaki Chain Type	Features
General			Standard Roller Chain Series	BS GT4 Winner	Superior Performance Chain in
				ANSI G7	both BS/DIN and ANSI
Lube-Free			LAMBDA Series	BS LAMBDA	Self Lube Chain;
				ANSI LAMBDA	Maintenance Free
			X-LAMBDA Series	BS X-LAMBDA	Self Lube under Severe Dust Conditions
Heavy Duty			Heavy Duty Series	ANSI H	Higher Fatigue Strength
				ANSI HT	Anti-Shock Performance
			SUPER Series	ANSI SUPER	Better Fatigue Strength
				ANSI SUPER-H	Better Fatigue Strength and Anti-Shock Performance
				ANSI ULTRA SUPER	Ultimate Strength
Anti Corrosion	Corrosion Protected	Carbon Steel Base	NP Series	BS (LAMBDA) NP	Shining Nickel Plated Parts
				ANSI (LAMBDA) NP	
			N.E.P. Series	BS N.E.P. BS LAMBDA N.E.P. ANSI N.E.P. ANSI LAMBDA N.E.P.	Environmental Friendly Corrosion Protection
	Corrosion Resistant	Stainless Steel Base	SS Series	BS SS	Stainless Steel SUS304
				ANSI SS	Excellent Corrosion Resistant
			AS Series	ANSI AS	Higher Maximum Allowable Load
			PC Series	BS PC	SUS304+Engineering Plastic Inner Link;
				ANSI PC	Lube Free
Specialty Chain			Leaf Chain Series	ANSI AL	Ideally Suited for Lifting Applications
				ANSI BL	
			Low Noise Series	ANSI SNS	Unique Spring Roller for Noise Reduction

CATALOGUE 3 CUSTOM MADE CHAIN

Classification				Chain Series	Tsubaki Chain Type	Features
ANSI Drive Chain				Lube-Free Series	ANSI LAMBDA Heavy Duty	Self Lube, Increased Tensile Strength
					ANSI X-LAMBDA	Self Lube under Severe Dust Conditions
					ANSI LAMBDA DKF	High Temperature up to 230°C
						Food Grade
				Corrosion Resistant Series	ANSI TI	All Titanium
					ANSI PC-SY	Superior Chemical Resistance
					ANSI NS	Ultimate Corrosion Protection, Heat Application
				Cold Resistant Series	ANSI KT	Low Temperature Freezing Application down to -60°C
ANSI Attachment Chain				Standard Series	ANSI Single Pitch Standard	Flexible Design Capability
					ANSI Double Pitch Standard	
				Lube-Free Series – Standard	ANSI Single Pitch LAMBDA	Self Lube Chain
					ANSI Single Pitch LAMBDA CU	Curved Chain
					ANSI Double Pitch LAMBDA	Self Lube Chain
				Lube-Free Series – Special Environments	ANSI Single Pitch LAMBDA CKF	High Temperature up to 230°C
						Food Grade
					ANSI Double Pitch LAMBDA CKF	High Temperature up to 230°C
						Food Grade
				Corrosion Resistant Series	ANSI Single Pitch SS	SUS304, Excellent Corrosion Resistant
					ANSI Single Pitch SS CU	SUS304, Curved Chain
					ANSI Double Pitch SS	SUS304, Excellent Corrosion Resistant
Conveyor Chain	Tsubaki Standard			Standard Series	RF	Wide Variation
				Low Maintenance Series	RF LAMBDA	Self Lube, Direct Conveying
					BR Bearing Roller	Low Friction of Roller, Save Energy
				Deep Link Series	RFD	Ideal for Direct Conveying
				Free Flow Series	VR Double Plus	Chain Speed can be Reduced 2,5 Times, Save Energy
	DIN Standard			Standard Series	M	Wide Variation
					FV	
				Hollow Pin Series	MC	Hollow Pin
					FVC	
				Deep Link Series	MT	Ideal for Direct Conveying
					FVT	
				Scraper Series	TFM	Scraping Attachments
					TF	



LEADING PRODUCTS AND EXCELLENT SERVICE

At TSUBAKI we know that customers want the best. We are also aware that each and every one of our customers has unique requirements. Therefore, we take pride in our ability to deliver an extensive product line-up that satisfies these high expectations. We believe that in coming years there will be an increase in demand for quality in products as well as in services. With an eye on these future trends, we are committed to take on the challenge of technical innovation.

Our main products, along with automotive timing-drive systems, are industrial drive chains, attachment chains and large size conveyor chains. Related products such as cam clutches, sprockets, shaft couplings, safety devices, toothed belts & pulleys compliment the program. In the new and modern workshop in Dordrecht, standard attachment chains can be assembled as ready-to-use items, thus saving customers time and achieving highest quality. In case of special needs it is possible to manufacture chains completely to order.

For optimum performance and reliability, a chain has to be selected carefully. In respect of this customers can rely on our specialised sales people and our experienced field engineers for technical advice (including maintenance and chain inspection on site). To ensure a close customer contact and excellent service an extensive network of distribution points is strategically placed throughout Europe and other designated markets.





Tsubakimoto Europe B.V. serves the Pan-European market, Africa and the Middle East. Our headquarters are located in Dordrecht, the Netherlands, serving Power Transmission customers. From the subsidiary office in Nottingham, Tsubaki UK serves the United Kingdom, Ireland and Iceland and from the office in Gilching, Germany customers in Germany, Austria and Switzerland are served. The TSUBAKI Group includes 46 production locations and 63 group companies worldwide. Our production and sales networks are now more developed than ever.

TABLE OF CONTENTS

Introduction to TSUBAKI Attachment Chain **6**

- Attachment Chain Structure 6

- Chain Types 10

- Attachments 10

- Chain Length Tolerance 12

- Match & Tag Service: High Accuracy, Narrow Tolerance Service 12

- Local Assembly Service 13

BS LAMBDA Lube Free Attachment Chain **14**

- BS Single Pitch LAMBDA Chain - Drawings and Dimensions 15

- BS Single Pitch LAMBDA RF Chain - Drawings and Dimensions 16

BS Standard Attachment Chain **18**

- BS Single Pitch Standard Chain - Drawings and Dimensions 19

- BS Single Pitch RF Chain - Drawings and Dimensions 20

BS Attachment Chain for Corrosive Environments **22**

- BS Single Pitch PC Chain - Drawings and Dimensions 23

- BS Single Pitch SS Chain - Drawings and Dimensions 24

- BS Single Pitch N.E.P. Chain - Drawings and Dimensions 25

ANSI LAMBDA Lube Free Attachment Chain **26**

- ANSI Single Pitch LAMBDA Chain - Drawings and Dimensions 27

- ANSI Single Pitch LAMBDA Hollow Pin (HP) Chain - Drawings and Dimensions 28

- ANSI Double Pitch LAMBDA Chain - Drawings and Dimensions 29

ANSI Standard Attachment Chain **30**

- ANSI Single Pitch Standard Chain - Drawings and Dimensions 31

- ANSI Single Pitch Hollow Pin (HP) Chain - Drawings and Dimensions 32

TABLE OF CONTENTS

- ANSI Single Pitch Curved (CU) Chain - Drawings and Dimensions 33
- ANSI Double Pitch Standard Chain - Drawings and Dimensions 34
- ANSI Double Pitch Hollow Pin (HP) Chain - Drawings and Dimensions 35

ANSI Attachment Chain for Corrosive Environments 36

- ANSI Single Pitch P Chain - Drawings and Dimensions 37
- ANSI Single Pitch PC Chain - Drawings and Dimensions 38
- ANSI Single Pitch SS Chain - Drawings and Dimensions 39
- ANSI Single Pitch SS Hollow Pin (HP) Chain - Drawings and Dimensions 40
- ANSI Double Pitch SS Chain - Drawings and Dimensions 41
- ANSI Double Pitch SS Hollow Pin (HP) Chain - Drawings and Dimensions 42

Stock Specialty Attachment Chain 44

Special Chain Catalogues and Leaflets 46

Temperature Selection Method 47

Corrosion Resistance Guide 48

TSUBAKI Attachment Chain Application Check Sheet 50

TSUBAKI Attachment Chain Layout Sheet 51

General Terms and Conditions of Sale Tsubakimoto Europe B.V. 52

For Safe Use 53

Note:
Chains which are included in this catalogue are available from stock, with the exception of the chains of which the Tsubaki chain number is indicated with gray characters.

INTRODUCTION TO TSUBAKI ATTACHMENT CHAIN

In the world of attachment chain TSUBAKI is the manufacturer you require to assure smooth operation. Whether your application requires attachments or extended pins in Carbon Steel, N.E.P., Nickel Plating or Stainless Steel, TSUBAKI is your partner. TSUBAKI's maintenance free solution, LAMBDA, is also available with a wide range of attachments. When starting with a completely new design, TSUBAKI can tailor make an attachment chain for you in any specification.

Attachment Chain Structure

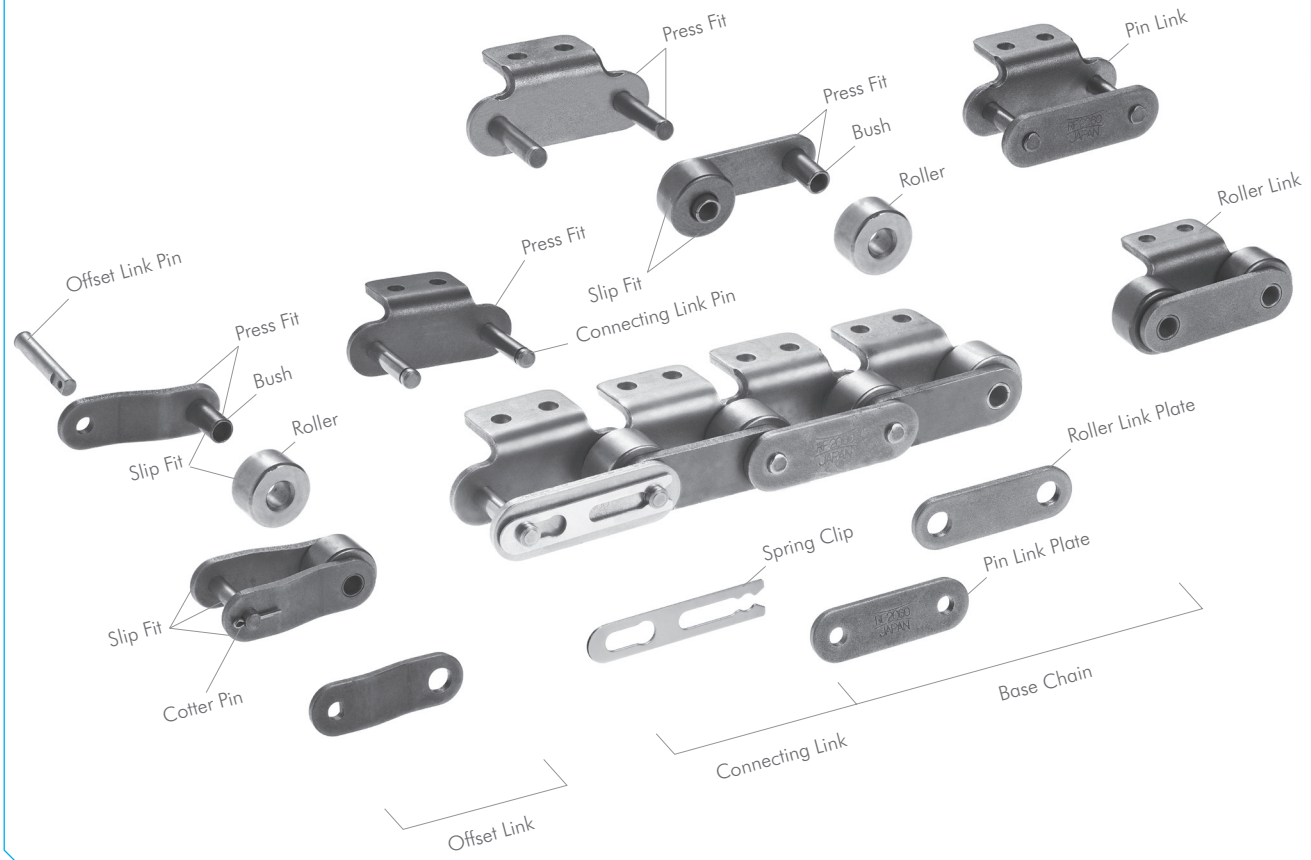

Attachment Chain Structure

There are mainly two types of Attachment Chain: Single Pitch and Double Pitch.

1. Single Pitch Attachment Chain

Single pitch attachment chains are based on roller chains with attachments added to make them suitable for conveying use. Due to the smaller chain pitch, this type of chain is ideal for short centre distances, and the conveying of small and light goods. Single pitch attachment chain has smooth transfer and low noise characteristics and can be used at relatively medium conveying speeds. Standard roller chain sprockets can be used in most cases.



Fig. 1 Single Pitch Attachment Chain

2. Double Pitch Attachment Chain

This is the most commonly used attachment chain and is utilised widely in the automotive parts, electric, electronic, and precision machinery industries. Double pitch roller chain has the same basic construction as single pitch roller chain, but has twice the pitch length. A major benefit is that whilst larger conveyor lengths are possible, a double pitch chain uses only half the components of a single pitch chain in the same application, resulting in less components to wear.

The choice of sprockets depends on the roller type applied to the chain. Chain with S-type rollers can be driven by standard roller chain sprockets (> 30 teeth). The chain engages every second tooth. Special sprockets are needed when R-type rollers are used.



Fig. 2 Double Pitch Attachment Chain

3. Three Basic Dimensions

Pitch, Roller Diameter and Inner Width are known as the "Three Basic Dimensions of Roller Chain." When these three dimensions are identical to the existing chain being replaced, then the roller chain and sprockets are dimensionally compatible. With attachment chain a lot of additional dimensions are important to ensure a safe replacement and carefree installation of the chain. Please refer to our dimension tables for the appropriate dimensions.

4. Basic Parts

Link Plate

The link plate is the component that bears the tension placed on the chain. Usually this is a repeated load, sometimes accompanied by shock. Therefore, the plate must not only have great static tensile strength, it must also hold up to the dynamic forces of load and shock.

Pin

The pin is subject to shearing and bending forces transmitted by the plate. At the same time, it forms a load-bearing part (together with the bush) when the chain flexes during sprocket engagement. Therefore, the pin needs high tensile and shear strength, resistance to bending, and must also have sufficient endurance against shock and wear.

Bush

The bush is subject to complex forces from all parts, especially from the repetition of shock loads when the chain engages with the sprocket. Therefore, the bush needs extremely high shock resistance. In addition, the bush forms a load-bearing part together with the pin and as such requires great wear resistance.

Roller

The roller is subject to impact load as it mates with the sprocket tooth during engagement of the chain with the sprocket. After engagement, the roller changes its point of contact and balance. It is held between the sprocket tooth and bush, and moves on the tooth face whilst receiving a compression load. Therefore, it must be resistant to wear and still have strength against shock, fatigue and compression.

There are two types of rollers for Double Pitch Attachment chain: S-roller (standard) and R-roller (oversized). The S-rollers are used in short-length and slow-speed conveying. The R-rollers are most commonly used for longer conveying applications.
(RS35 is a bush chain and does not have rollers).

Roller Link

Two bushes are press fit into two roller link plates and rollers are inserted to allow rotation around the outside of the bushes during operation. This is the same for single and for multi strand chains.

Pin Link

The pin link consists of two pins that have been press fit into two pin link plates.

Spring Clip and Cotter Pin

The spring clip prevent the link plate from becoming detached, with the cotter pin type being as an added security measure where there is as possibly of the clip being removed due to interference from chain guides or some other aspect of the application.

5. Assembly Parts

Roller chains are usually made up of a number of inner and outer links in an endless formation. Although offset links can be used when there is an odd number of links in the roller chain, it is better to use a design that requires an even number of links, thus eliminating the use of offset links.

Connecting Links

There are two types of connecting link: spring clip connecting link and cotter pin connecting link. It's common to use slip fit spring clip connecting links for small size attachment chains. Cotter pin connecting links are used for large size attachment chains and on customer request.

INTRODUCTION TO TSUBAKI ATTACHMENT CHAIN



Fig. 3 Overview Single Pitch Attachment Types

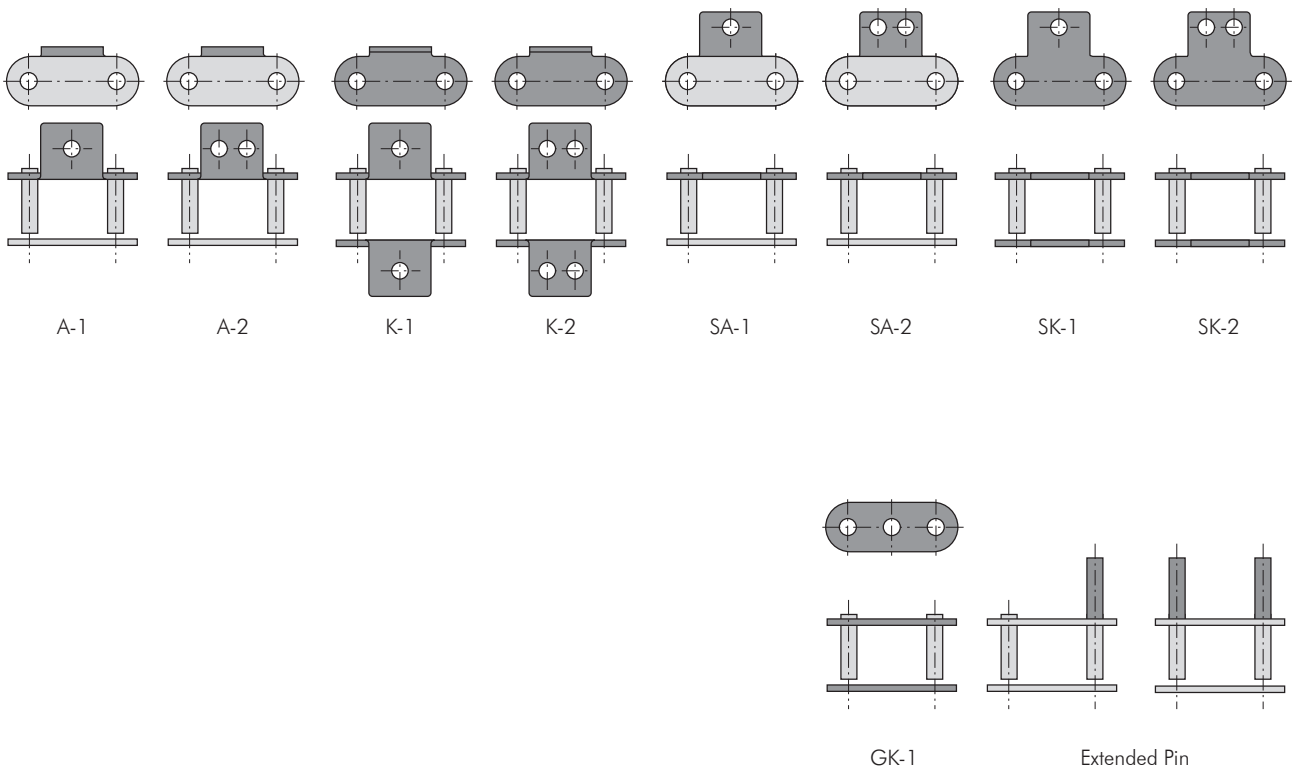

Fig. 4 Overview Double Pitch Attachment Types

INTRODUCTION TO TSUBAKI ATTACHMENT CHAIN

Chain Types

In addition to standard single and double pitch attachment chain, two other chain types are commonly used for conveyance purposes:

Hollow Pin Chain (HP)

This particular design of chain has a hollow bearing pin allowing for the installation of various attachments. Usually these chains are used for conveyors. The advantages of installing attachments into the hollow pin include the following:

- The hollow pin is at the centre of articulation, and always keeps the pitch length. Regardless of whether the chain is straight or wrapping around the sprocket, the centre distance of attachments is always the same.
- With a cross rod over two chains, the load from the attachments is distributed equally between the link plates. The chain can fully utilise its strength and will not twist.
- It is easy to change, maintain, and adjust attachments.
- Standard sprockets are used for the single pitch series. For double pitch series, standard sprockets for double pitch roller chain are used.



Fig. 5 Hollow Pin Chain

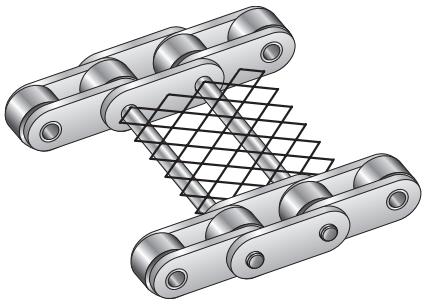

Fig. 6 Cross Rods with Mesh

Curved Chain (CU)

Due to TSUBAKI's exclusive pin and bush structure and the wide plate to plate clearance, this roller chain has a large side flex radius. The basic dimensions of this chain are the same as ANSI standard roller chain. The ability to use ANSI standard sprockets makes curved transmission simple. Guides are required for all curved areas.

Attachments

The characteristics of the conveyed materials and the working environment are different for each application. Many types of attachments are available with or without jigs.
Our standard attachments are available based upon the long history of attachment chain usage and demand. Being high quality, economical with a quick delivery to meet customers' requirements.

- For Single Pitch attachment chain, standard attachments include: A, WA, K, WK, SA, WSA, SK, WSK and Extended Pin types.
- For Double Pitch attachment chain, standard attachments include: A, K, SA, SK, GK-1 and Extended Pin types.

In figures 3 and 4 you can find an overview of the most common attachment types.

Standard attachments are available for a wide variety of chains:

- With special surface treatments (N.E.P. or Nickel-Plated).
- Made of 304 stainless steel or other materials.
- For lube-free operations (LAMBDA and PC series, etc.).

W-Designation

Attachments with W-designation only differ in the width of the bent or extended part of the link plate. The width of W-attachments is equal to the width of the link plate.
The W-type option is only applicable on the four standard attachments: A, K, SA and SK (referenced WA, WK, WSA and WSK respectively).
There are no W-type attachments available for double pitch attachment chains.

A Attachment

An A attachment is the most commonly used. It has a bent link plate that extends out on one side of the chain, forming an L-shape. It comes with one or two bolt holes, referred to as A-1 or A-2. The attachment interval can vary (for example, on each chain link, every five links, or two attachments in a series with intervals every four links, etc.). Generally two strands of chain are used in parallel with slats (Figure 8).



Fig. 7 A-1 Attachment

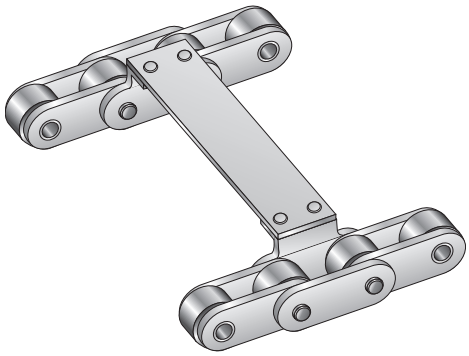

Fig. 8 A-2 Attachment with Slat

The attachments are subject to bending force. If they convey heavy objects, have long jigs installed, or receive side loads,

twisting force is added to the bending force. Depending on the application, please ensure you consider these forces in your calculations.
The shape of the attachment influences the design of the equipment. If slats do not cover the chain rollers, guide rails may be used to support the chain rollers on the return side.

K Attachment

This is an attachment made by installing A attachments on both sides of the chain. The attachment is called K-1 or K-2 based on the number of bolt holes on each individual attachment. The attachment interval can vary, same as the A attachment (Figure 9).



Fig. 9 K-1 Attachment

The top of the attachment is higher than the R-rollers, so slats or jigs can be installed over the chains (Figure 10). Objects can also be conveyed directly on the K attachments.
When a wide slat is installed on two A attachment chains, the slats may not be able to support the weight. A chain with K attachments is installed between the A attachment chains to help support the load.

When the slats are rigid enough and are fastened well to the attachments, there is almost no effect from bending force to the strength of the attachment. But if the slat is not fastened well, make sure to consider the bending force in your calculation.

If long jigs are installed, or the attachment receives side loads, it will be exposed to twisting forces.
The return side of the K attachment chain cannot be supported with guide rails on the rollers. The return may be slack or supported in some other way.

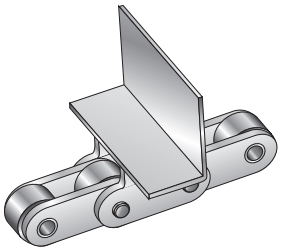

Fig. 10 K Attachment with L-angle

SA Attachment

For the SA attachment, the link plate is extended on one side of the chain, and one or two bolt holes are installed. These are called SA-1 or SA-2 depending on the number of the bolt holes (Figure 11). The attachment interval can vary the same as the A attachment. These attachments may be adapted for use with hooks or slats (Figure 12).
The SA attachment is simpler and stronger than the A attachment, and may receive bending and twisting force depending on the direction of the loads.

The return side of the chains can be supported by guide rails on the rollers unless bolts extend into the attachment.



Fig. 11 SA-1 Attachment

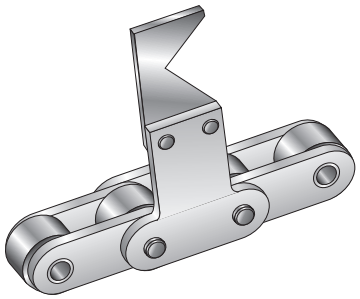

Fig. 12 SA-2 Attachments with Hook

SK Attachment

SK attachments are made by installing SA attachments on both sides of the chain. They are called SK-1 or SK-2, depending on the number of bolt holes on each individual attachment. The attachment interval can vary the same as the A attachment (Figure 13).

Usually SK attachments are used with dogs or jigs (Figure 14). SK attachments are strong enough to withstand bending or twisting forces.
The return side of SK attachment chains cannot be supported by guide rails on the rollers as can A or SA attachment chains. The return must be slack or supported in some other manner.



Fig. 13 SK-1 Attachments

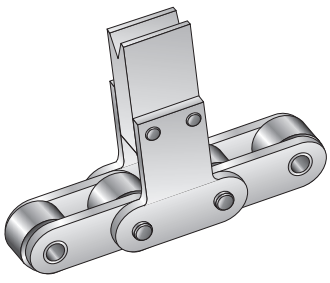

Fig. 14 SK-2 Attachments with V-block

INTRODUCTION TO TSUBAKI ATTACHMENT CHAIN

Extended Pin Attachment

In this form, one end of the pin is extended. The attachment interval can vary the same as the A attachment (Figure 15).
As shown in Figure 16, two sets of D attachment chains can be connected to cross rods, or jigs (such as blocks).
The extended pins are subjected to bending and shearing forces. The return side of the D attachment chain can be supported by guide rails on the rollers.



Fig. 15 Extended Pin Attachment

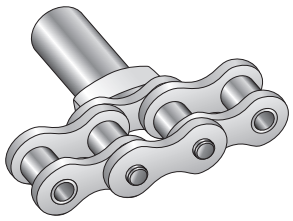

Fig. 16 D Attachments with Jigs

GK-1 Attachment

A hole is added to the centre of both link plates, to be able to attach cross rods between two (or more) parallel running chains. The attachment interval can vary the same as the A attachment (Figure 17). This type of attachment is often used when cross rods with larger diameters than the maximum applicable diameters of hollow pin chains are used. This type of attachment is only available as a double pitch attachment chain, Type R-rollers can not be used in combination with GK-1 attachments due to the interference between the roller and the hole in the link plates.



Fig. 17 GK-1 Attachment

Chain Length Tolerance

Maintaining an accurate overall length tolerance in attachment chain is essential for conveying and index drive equipment used in such applications as inserting components, product assembly lines, integrated circuit boards and board/paper & packaging amongst many others.
The tolerance of the overall chain length is depending on the chain type and the appropriate international standard:

Single Pitch Chain

- BS Single Pitch Roller Chain
  According to ISO 606: 0% to +0.15%
- BS Single Pitch Attachment Chain
  According to ISO 606: 0% to +0.30%
- ANSI Single Pitch Roller Chain
  According to ANSI: 0% to +0.15%
- ANSI Single Pitch Attachment Chain
  According to ANSI: 0% to +0.30%

Double Pitch Chain

- ANSI Double Pitch Roller Chain
  According to ANSI: 0% to +0.13%
- ANSI Double Pitch Attachment Chain
  According to ANSI: 0% to +0.25%

TSUBAKI chain length tolerances are very narrow by nature, however some markets require narrow tolerance chain; in the market often referred to, and marketed as 1/3 DIN or 1/6 DIN length tolerance chain. TSUBAKI chain coming from the same production lot is generally complying with these tolerances as a standard; once again our constant high quality.
Figure 18 shows the amount of variation for several types of chain chosen at random from the same production run.

Chain Length [mm]	Matched Tolerance [mm]
< 14 m	< 3 mm
14~30 m	< 4 mm
30~44 m	< 5 mm

Fig. 18 Attachment Chains Chosen at Random from Same Production Lot

When even more accurate tolerances are required, TSUBAKI can offer an effective solution with the Match & Tag Service. This can be useful for attachment chains which have to run parallel in pairs and where a minimum of chain length tolerance is required.

Match & Tag Service: High Accuracy, Narrow Tolerance Service

For TSUBAKI quality is second nature- and so for customers with specific application requirements, we are able to supply chains with a specific length tolerance, or even pairs & multiple chains length matched and tagged in the same way for easy identification and installation. This is as a result of the sophisticated chain length measurement equipment (the "Matchy") kept in house within the European headquarters with supply times for such chains kept to a minimum-ideal for distributors, final consumers and OEM customers alike.

Sizes

The Matchy at our European Headquarters is equipped for:

- BS Single Pitch sizes RS08B to RS32B
- ANSI Single Pitch sizes RS40 to RS100 (including Heavy Duty Series)
- ANSI Double Pitch sizes RF2040 to RF2100

For other sizes and specific demands please contact TSUBAKI, our Engineering Department will explain all options available.

Tolerances

When chains have to run in parallel for conveying purposes in for instance packaging machines or when a minimum of difference

in chain length is required in lifting applications (accumulator towers in the steel and carpet industry) TSUBAKI excels in quality performance. We can guarantee a maximum chain length difference of 0.50 mm independent of the total chain length demanded by our customers!

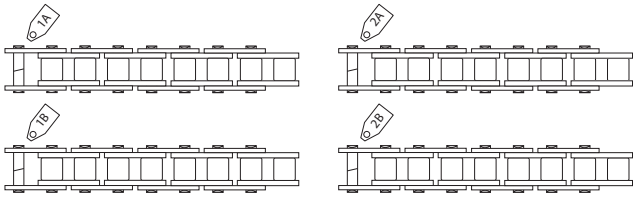

Fig. 19 Tagging of Matched Chain Strands

Local Assembly Service

TSUBAKI offers a huge range of attachment chains to suit virtually any application.

An extended range of stock components covering the majority of standard applications, and a Built To Order service using more specialised attachments also held in stock within Tsubakimoto Europe-swift deliveries can be both achieved...and maintained. Along with the Made To Order service when very unusual or highly specialist solutions can be delivered on accurate lead times from TSUBAKI's dedicated state of the art factory results in a comprehensive supply chain capability.

As our customers increase production capacity and reduce maintenance windows, we believe that this high level of product availability and swift delivery can make a difference. This policy represents TSUBAKI's core values.

If a standard attachment chain is required (for volumes typically under 50 meters) it can be assembled from stock lengths and/or components. If an attachment is required with a specific dimension requirement such as a non standard assembly hole then the attachment can be produced within Europe.

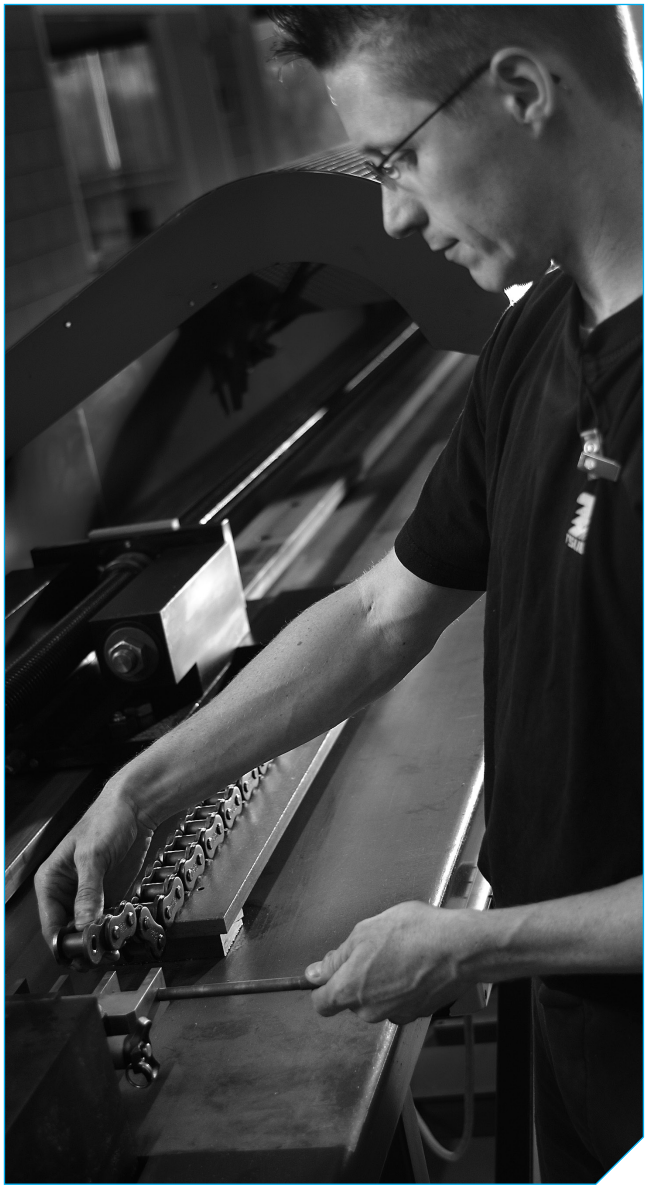

Fig. 20 Matching Chain Strands

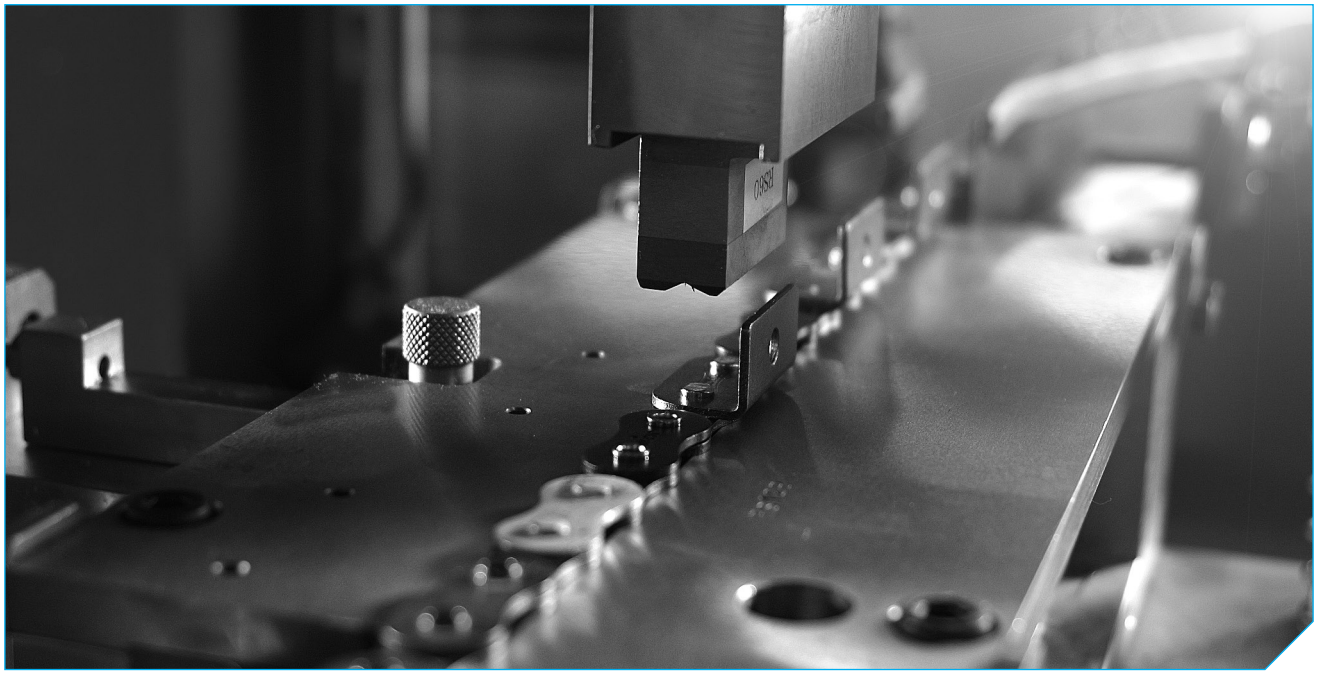

Fig. 21 Local Assembly Service

BS LAMBDA LUBE FREE ATTACHMENT CHAIN

TSUBAKI's LAMBDA chains were the first in the industry to use a special oil-impregnated bush. Since their launch in 1988, they have been adopted for diverse industries and applications, and their performance has been highly rated. TSUBAKI has a wide line-up of lube-free, long life products that help customers reduce costs.

Technical Evolution

As a pioneer in the lube-free chain market, TSUBAKI will reveal some of the key elements behind BS LAMBDA's outstanding performance:

Sintered Bush

A special oil-impregnated sintered bush in combination with a special coated pin for long-term internal lubrication is the secret of TSUBAKI BS LAMBDA's long economic life and wear resistance.

Temperature and Lubrication

TSUBAKI BS LAMBDA has outstanding performance in temperatures up to +150°C.

For temperatures above +150°C: Due to the special NSF-H1 certified lubrication impregnated bushes, TSUBAKI BS LAMBDA KF Series is usable in a wide temperature range (from -10°C to +230°C), and for food product applications while at the same time being kind to the environment.
Please consult TSUBAKI for more detailed information.



Fig. 22 Basic Construction

Advantages

TSUBAKI has enhanced the BS LAMBDA with the following advantages:

Save Maintenance Costs

No expensive labour costs as it is not required to manually lubricate this chain.

Save Purchasing Costs

Lower frequency of purchasing due to the high quality of the chain and its long economic life. No purchasing of lubricants or lubrication systems necessary.

Higher Productivity

No unforeseen downtime due to chain breakage. Less time required for maintenance and therefore more time for production.

Environmental Friendly

Applications run clean thus reducing the risk of contaminating products, machines, floor, etc.

Inter-Changeability

BS LAMBDA attachment chains are fully interchangeable with standard BS roller chains.

Standard Product Range

The product range for our standard LAMBDA attachment chains is:

- BS Single Pitch LAMBDA chain + standard attachments
- BS Single Pitch LAMBDA RF chain with flat shaped link plates
- ANSI Single Pitch LAMBDA chain + standard attachments
- ANSI Single Pitch LAMBDA HP Hollow Pin chain
- ANSI Double Pitch LAMBDA chain

Special attachments can be designed and manufactured to meet your specific requirements.



BS LAMBDA LUBE FREE ATTACHMENT CHAIN

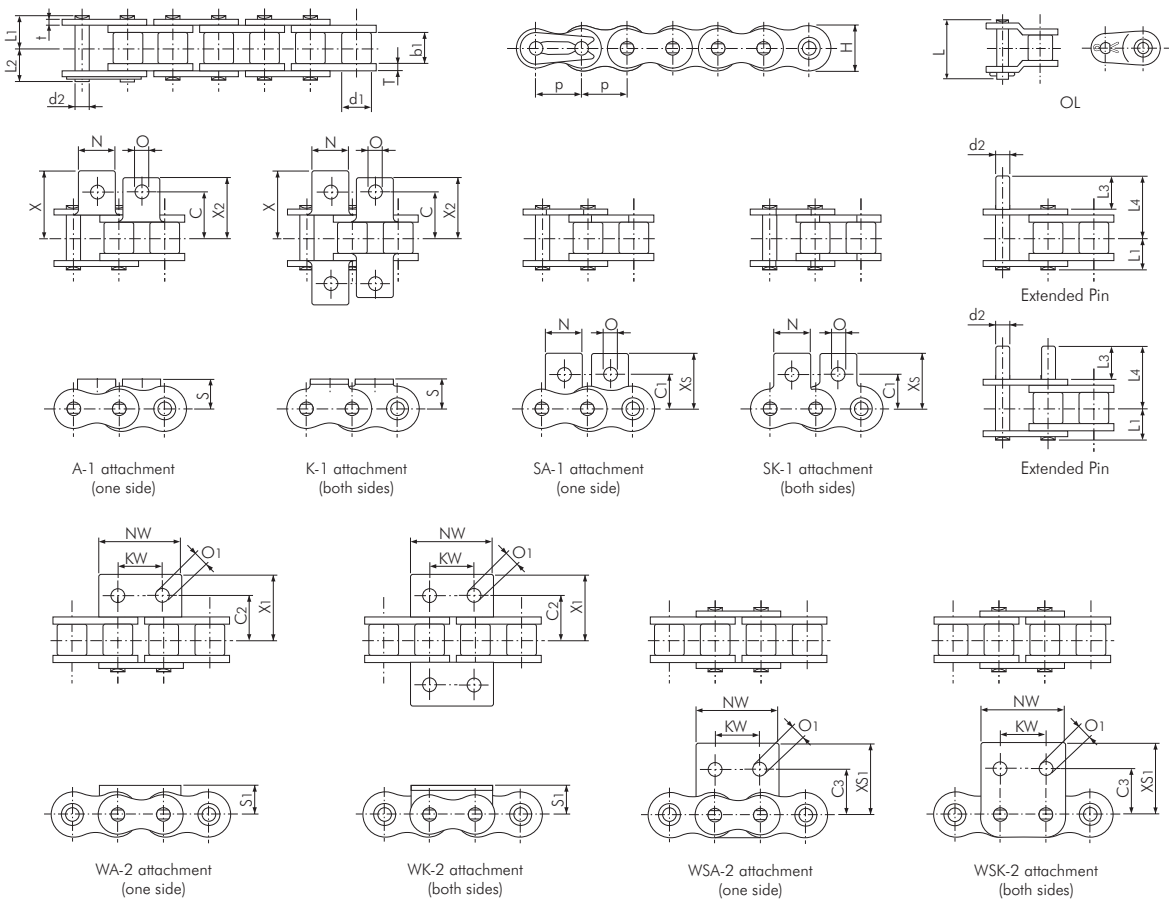

BS Single Pitch LAMBDA Chain

Dimensions in mm

TSUBAKI Chain No.	Pitch p		Roller Diameter d1	Inner Width b1	Pin Diameter d2	Pin Length L1	Pin Length L2	Pin Length L3	Pin Length L4	Pin Length L	Link Plate Thickness T	Link Plate Thickness t	Link Plate Height H (max.)	Approx. Mass kg/m
RS08B-LM	12.70	(1/2")	8.51	7.75	4.45	8.40	10.00	14.70	22.20	18.60	1.60	1.60	11.80	0.70
RS10B-LM	15.875	(5/8")	10.16	9.65	5.08	9.55	11.25	17.80	26.15	20.80	1.50	1.50	14.70	0.95
RS12B-LM	19.05	(3/4")	12.07	11.68	5.72	11.10	13.00	20.80	30.60	24.40	1.80	1.80	16.10	1.25
RS16B-LM	25.40	(1")	15.88	17.02	8.28	17.75	19.95	33.20	49.35	41.10	4.00	3.20	21.00	2.70

TSUBAKI Chain No.	Attachment Dimensions C	C1	C2	C3	KW	N	NW	O	O1	S	S1	X	X1	X2	XS	XS1	Attachment Mass A SA kg/att.	K SK kg/att.	WA WSA kg/att.	WK WSK kg/att.	Ext. Pin kg/att.
RS08B-LM	11.90	12.70	12.70	13.10	12.70	11.40	24.60	4.20	4.90	8.90	8.90	19.05	20.30	17.15	19.30	20.70	0.002	0.004	0.005	0.010	0.001
RS10B-LM	15.90	15.90	15.90	16.60	15.90	12.70	30.00	5.00	5.00	10.20	10.20	22.25	22.85	20.60	22.90	23.60	0.003	0.006	0.006	0.012	0.002
RS12B-LM	19.05	22.20	17.45	17.60	19.10	16.50	34.80	7.10	5.50	13.50	11.40	29.85	25.65	27.80	32.05	25.75	0.006	0.012	0.009	0.018	0.003
RS16B-LM	23.80	23.90	28.60	26.00	25.40	24.30	46.00	6.70	8.10	15.20	15.90	37.35	39.25	34.40	34.10	36.70	0.014	0.028	0.030	0.060	0.008

Note:

1. Connecting links are clip type.
2. Warning: previous generations of Lambda chain cannot be connected with the above chains due to different dimensions.

BS LAMBDA LUBE FREE ATTACHMENT CHAIN

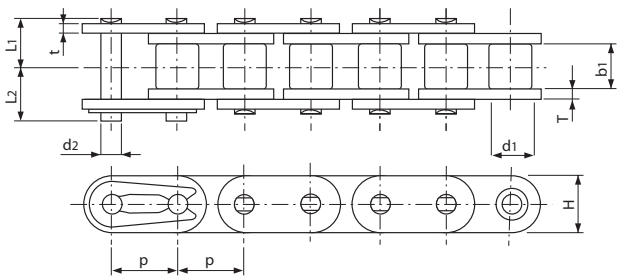

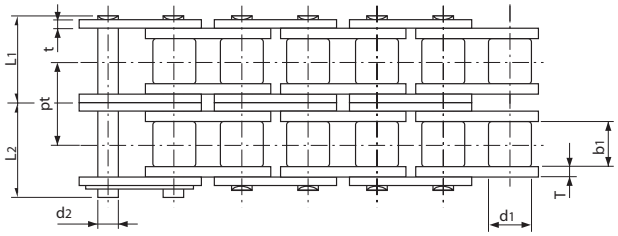

BS Single Pitch LAMBDA RF Chain

Dimensions in mm

TSUBAKI Chain No.	Pitch p		Roller Diameter d1	Inner Width b1	Pin Diameter d2	Pin Length L1	Pin Length L2	Link Plate Thickness T	Link Plate Thickness t	Link Plate Height H	Transverse Pitch pt	Approx. Mass kg/m
RF08B-LM-1	12.70	(1/2")	8.51	7.75	4.45	8.40	10.00	1.60	1.60	12.00	-	0.70
RF08B-LM-2						15.30	16.90				13.92	1.40
RF10B-LM-1	15.875	(5/8")	10.16	9.65	5.08	9.55	11.25	1.50	1.50	14.70	-	0.95
RF10B-LM-2						17.85	19.55				16.59	1.90
RF12B-LM-1	19.05	(3/4")	12.07	11.68	5.72	11.10	13.00	1.80	1.70	16.10	-	1.25
RF12B-LM-2						20.85	22.75				19.46	2.60
RF16B-LM-1	25.40	(1")	15.88	17.02	8.28	17.75	19.95	4.00	3.20	24.00	-	2.70
RF16B-LM-2						33.55	35.75				31.88	5.60

Note:

1. Connecting links are clip type.
2. Intermediate plate of RF08B-LM-2 chain is a solid plate.



Logistic Warehouse Dordrecht

BS STANDARD ATTACHMENT CHAIN

For common applications, TSUBAKI can provide you with an outstanding range of Attachment Chain. The chain is manufactured according to the appropriate European Standards.

Construction
This chain is based on standard BS roller chain and assembled with attachments for conveying.

Key Features
- Due to the small pitch of these chains, the drive design is more compact.
- Usually sprockets with a large number of teeth are used. The chain speed does not vary significantly as the chain engages with sprockets. With less impact, there is also less noise generated as a result of the impact between the roller and sprocket tooth.
- These chains may be used for high speed conveyor applications.
- A wide variety of standard and special attachments are available for this chain series.

Customised Pre-Lubrication Service
Proper lubrication is the key to extend the life and improve the performance of a chain. In order to get the best performance in general applications (-10°C to +60°C), all BS drive chains are pre-lubricated. BS attachment chains however are NOT pre-lubricated, but have been treated with rust preventive oil for protection and therefore need to be lubricated before the chain is installed. The reason TSUBAKI does not pre-lubricate BS attachment chains is due to the fact that attachment chains often have to function in various environments where standard lubrication cannot be used.

For special applications and on customer's requirement, TSUBAKI can provide attachment chains which are pre-lubricated with a special lubricant which include:

- High temperature
- Low temperature
- Food safe
- Outdoor exposure
- Dusty environment

Please consult TSUBAKI for more detailed information.

Application Example
BS Standard attachment chain is used for short conveyor runs (usually less than 10 metres) and for conveying small and reasonably lightweight products. This chain is also suitable for conditions where noise levels need to be kept to a minimum.

Standard Product Range
The product range for our standard attachment chains is:

- BS Single Pitch Standard chain + standard attachments
- BS Single Pitch RF chain with flat shaped link plates
- ANSI Single Pitch Standard chain + standard attachments
- ANSI Single Pitch HP Hollow Pin chain
- ANSI Single Pitch CU Curved chain
- ANSI Double Pitch Standard chain + standard attachments
- ANSI Double Pitch HP Hollow Pin chain

Special attachments can be designed and manufactured to meet your specific requirements.



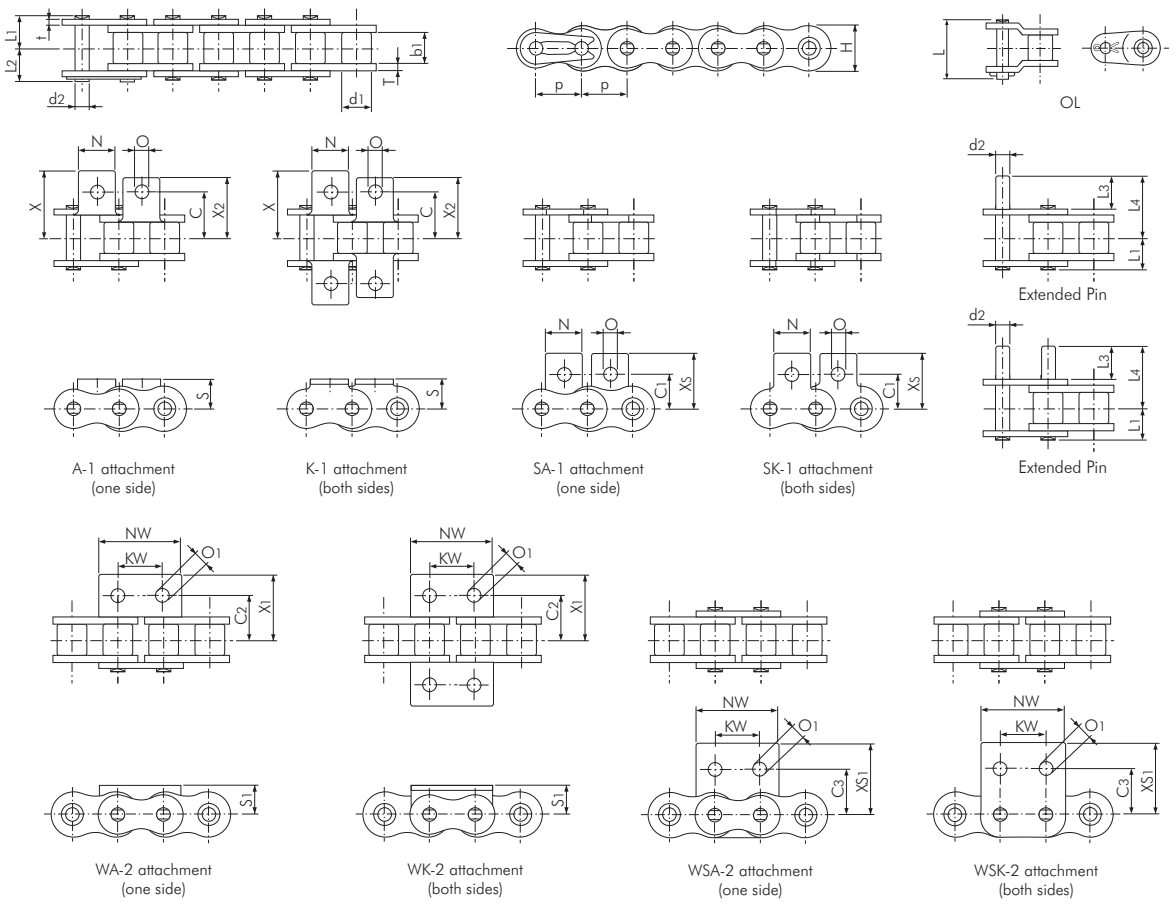

BS Single Pitch Standard Chain

Dimensions in mm

TSUBAKI Chain No.	Pitch p	Roller Diameter d1	Inner Width b1	Pin Diameter d2	Pin Length L1	Pin Length L2	Pin Length L3	Pin Length L4	Pin Length L	Link Plate Thickness T	Link Plate Thickness t	Link Plate Height H (max.)	Approx. Mass kg/m
RF06B	9.525 (3/8")	6.35	5.72	3.27	6.10	7.70	10.90	16.30	15.10	1.30	1.00	8.20	0.39
RS08B	12.70 (1/2")	8.51	7.75	4.45	8.40	10.00	14.70	22.20	18.60	1.60	1.60	11.80	0.70
RS10B	15.875 (5/8")	10.16	9.65	5.08	9.55	11.25	17.80	26.15	20.80	1.50	1.50	14.70	0.95
RS12B	19.05 (3/4")	12.07	11.68	5.72	11.10	13.00	20.80	30.60	24.40	1.80	1.80	16.10	1.25
RS16B	25.40 (1")	15.88	17.02	8.28	17.75	19.95	33.20	49.35	41.10	4.00	3.20	21.00	2.70
RS20B	31.75 (1 1/4")	19.05	19.56	10.19	19.90	23.10	38.40	56.90	46.60	4.40	3.40	26.00	3.85

TSUBAKI Chain No.	Attachment Dimensions C	C1	C2	C3	KW	N	NW	O	O1	S	S1	X	X1	X2	XS	XS1	Attachment Mass A SA kg/att.	K SK kg/att.	WA WSA kg/att.	WK WSK kg/att.	Ext. Pin kg/att.
RF06B	9.50	9.50	-	-	-	8.50	-	3.50	-	6.5	-	14.10	-	-	14.30	-	0.002	0.004	-	-	0.001
RS08B	11.90	12.70	12.70	13.10	12.70	11.40	24.60	4.20	4.90	8.90	8.90	19.05	20.30	17.15	19.30	20.70	0.002	0.004	0.005	0.010	0.001
RS10B	15.90	15.90	15.90	16.60	15.90	12.70	30.00	5.00	5.00	10.20	10.20	22.25	22.85	20.60	22.90	23.60	0.003	0.006	0.006	0.012	0.002
RS12B	19.05	22.20	17.45	17.60	19.10	16.50	34.80	7.10	5.50	13.50	11.40	29.85	25.65	27.80	32.05	25.75	0.006	0.012	0.009	0.018	0.003
RS16B	23.80	23.90	28.60	26.00	25.40	24.30	46.00	6.70	8.10	15.20	15.90	37.35	39.25	34.40	34.10	36.70	0.014	0.028	0.030	0.060	0.008
RS20B	31.75	31.80	-	-	-	25.40	-	8.70	-	19.80	-	44.85	-	-	44.00	-	0.027	0.054	-	-	0.014

Note:

1. RF06B chain has flat-shaped link plates.

BS STANDARD ATTACHMENT CHAIN

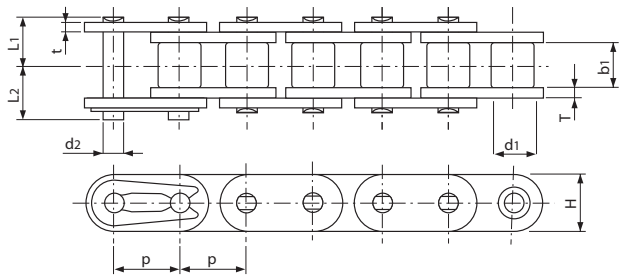

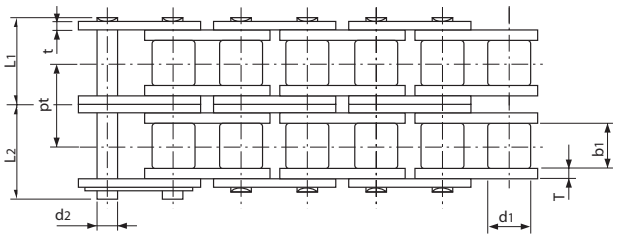

BS Single Pitch RF Chain

Dimensions in mm

TSUBAKI Chain No.	Pitch p		Roller Diameter d1	Inner Width b1	Pin Diameter d2	Pin Length L1	Pin Length L2	Link Plate Thickness T	Link Plate Thickness t	Link Plate Height H	Transverse Pitch pt	Approx. Mass kg/m
RF08B-1	12.70	(1/2")	8.51	7.75	4.45	8.40	10.00	1.60	1.60	12.00	-	0.75
RF08B-2						15.30	16.90				13.92	1.40
RF10B-1	15.875	(5/8")	10.16	9.65	5.08	9.55	11.25	1.50	1.50	14.70	-	1.00
RF10B-2						17.85	19.55				16.59	1.90
RF12B-1	19.05	(3/4")	12.07	11.68	5.72	11.10	13.00	1.80	1.80	16.10	-	1.30
RF12B-2						20.85	22.75				19.46	2.60
RF16B-1	25.40	(1")	15.88	17.02	8.28	17.75	19.95	4.00	3.20	24.00	-	2.80
RF16B-2						33.55	35.75				31.88	5.60

Note:

1. Connecting links are clip type.
2. Intermediate plate of RF08B-2 chain is a solid plate.



Chain Length Measuring Equipment (the "Matchy")

BS ATTACHMENT CHAIN FOR CORROSIVE ENVIRONMENTS

Whether your operation requires a sanitary environment, is exposed to corrosive chemicals, is heated to extreme temperatures, runs through a freezer, is exposed to the outdoors or is affected by excessive moisture: our specially designed and tested chains will outlast your current chains and contribute to a cost effective application.

Corrosion Resistant Chain (Stainless Steel base)

BS PC Engineering Plastic Combination Chain

The pins, outer plates and attachments of these chains are made of SUS304 equivalent (spring clips SUS301). White Engineering Plastic is used for the inner link. This combination makes it lube-free, low noise (5 dB lower than BS standard roller chain) and lightweight (50% lighter than BS standard roller chain). The working temperature range is: -20°C to +80°C. For details on corrosion resistance, please refer to the table in the back of this catalogue.

BS SS Stainless Steel Chain

All basic components of this chain are made of SUS304 equivalent Stainless Steel (except the spring clips, which are made of SUS301). This chain can be used in special environments such as underwater, acidic and in alkaline applications. It can also be used in high and low temperatures (-20°C to +400°C). SUS304 equivalent is only marginally magnetic, which is a result of the cold-forging process. For details on corrosion resistance, please refer to the table in the back of this catalogue.

Corrosion Protected Chain (Carbon Steel base)

BS N.E.P. New Environmental Plating Chain

BS N.E.P. Chain is a TSUBAKI BS chain that has undergone a special surface treatment process.
The link plates, attachments, bushes and bearing pins have a special three stage layer applied in order to provide the maximum protection from the operating or environmental conditions. (Spring clips are SUS301).
N.E.P. Rollers have a special coating designed to resist the corrosive conditions as well as the severe dynamic contact between roller and sprocket.
This chain is suitable for use in environments exposed to seawater, acid-rain and other adverse weather conditions. This chain does not contain any chemically hazardous substances such as Hexavalent Chromium, Lead, Cadmium and Mercury as regulated by RoHS[√]. It has a working temperature range of: -10°C to +150°C. Above +60°C a special high-temperature lubrication is required.
Of course, BS LAMBDA N.E.P. chain is also available for this purpose.

[√] RoHS = Restriction of Hazardous Substances

Standard Product Range

TSUBAKI has a wide variety of chains for corrosive environments; our standard product range is as follows:

- BS Single pitch PC chain + standard attachments
- BS Single pitch SS chain + standard attachments
- BS Single pitch N.E.P. chain + standard attachments
- ANSI Single pitch PC chain + standard attachments
- ANSI Single pitch P Plastic chain
- ANSI Single pitch SS chain + standard attachments
- ANSI Single pitch SS HP Hollow Pin chain
- ANSI Double Pitch SS chain + standard attachments
- ANSI Double Pitch SS HP Hollow Pin chain

Special attachments can be designed and manufactured to meet your specific requirements.

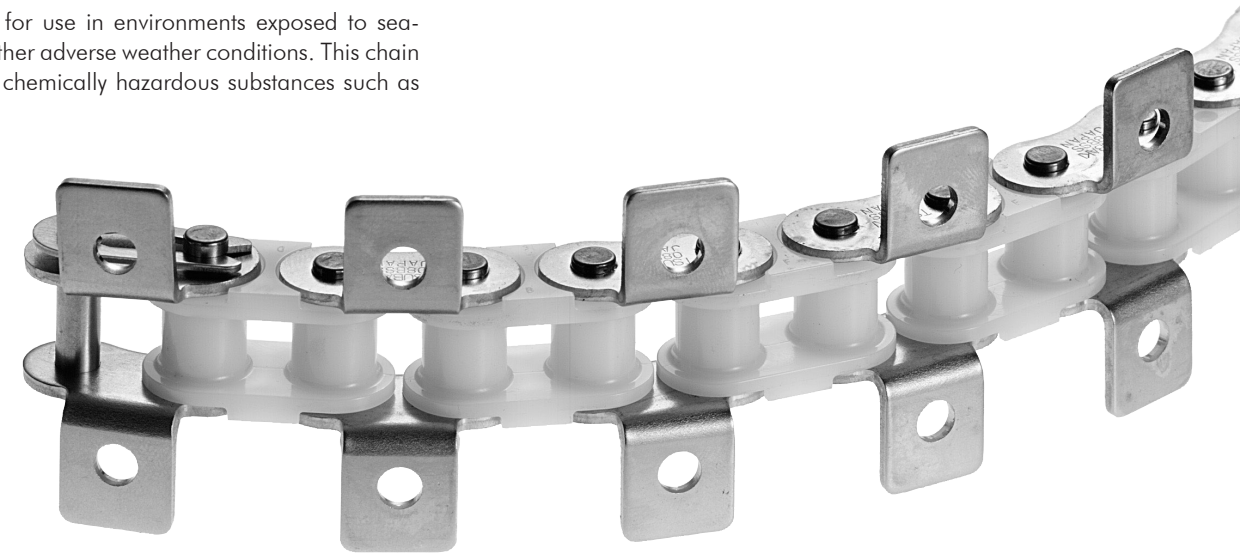

BS ATTACHMENT CHAIN FOR CORROSIVE ENVIRONMENTS

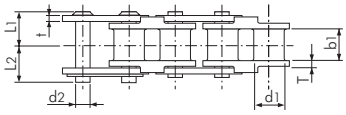

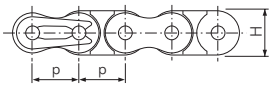

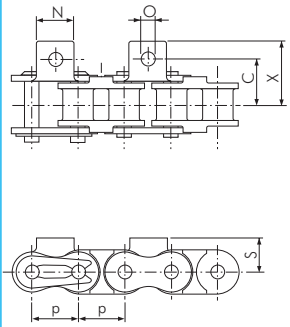

A-1 attachment
(one side)

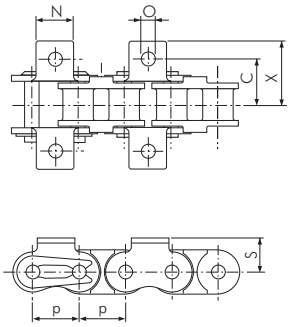

K-1 attachment
(both sides)

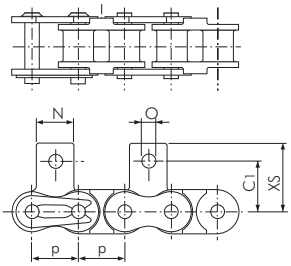

SA-1 attachment
(one side)

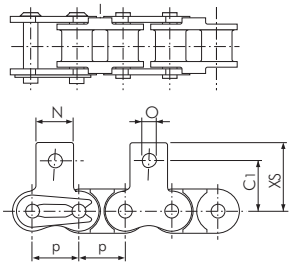

SK-1 attachment
(both sides)

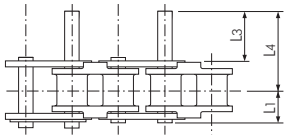

Extended Pin

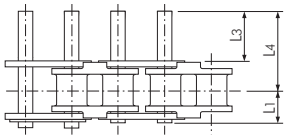

Extended Pin

BS Single Pitch PC Chain

Dimensions in mm

TSUBAKI Chain No.	Pitch p		Bush Diameter d1	Inner Width b1	Pin Diameter d2	Pin Length L1	Pin Length L2	Pin Length L3	Pin Length L4	Link Plate Thickness T	Link Plate Thickness t	Link Plate Height H (max.)	Max. Allowable Load acc. to Tsubaki kN	Approx. Mass kg/m
RF06B-PC	9.525	(3/8")	6.35	5.72	3.28	6.50	7.25	11.30	16.65	1.30	1.00	8.20	0.20	0.23
RS08B-PC	12.70	(1/2")	8.51	7.75	4.45	8.35	10.05	14.90	22.25	1.60	1.50	12.00	0.46	0.40
RS10B-PC	15.875	(5/8")	10.16	9.65	5.08	9.55	11.25	17.80	26.15	1.50	1.50	14.70	0.53	0.51
RS12B-PC	19.05	(3/4")	12.07	11.68	5.72	11.10	13.00	20.90	30.70	1.80	1.80	16.10	0.70	0.67

TSUBAKI Chain No.	Attachment Dimensions C	C1	N	O	S	X	XS	Attachment Mass A SA kg/att.	K SK kg/att.	Ext. Pin kg/att.
RF06B-PC	9.50	9.50	8.50	3.50	6.50	14.10	14.30	0.002	0.004	0.001
RS08B-PC	11.90	12.70	11.40	4.20	8.90	19.05	19.30	0.002	0.004	0.001
RS10B-PC	15.90	15.90	12.70	5.00	10.20	22.25	22.95	0.003	0.006	0.002
RS12B-PC	19.05	22.20	16.50	7.10	13.50	29.85	32.30	0.006	0.012	0.003

Note:

1. Make sure to check the chain load again when replacing Stainless Steel Chain with PC Chain.
2. Offset links are not available.
3. Use a chain tensioner with an idler sprocket to adjust chain tension.
4. Guide rails should support the underside of the inner links.
5. For details on corrosion resistance selection, please consult our Corrosion Resistance Guide in this catalogue.

BS ATTACHMENT CHAIN FOR CORROSIVE ENVIRONMENTS

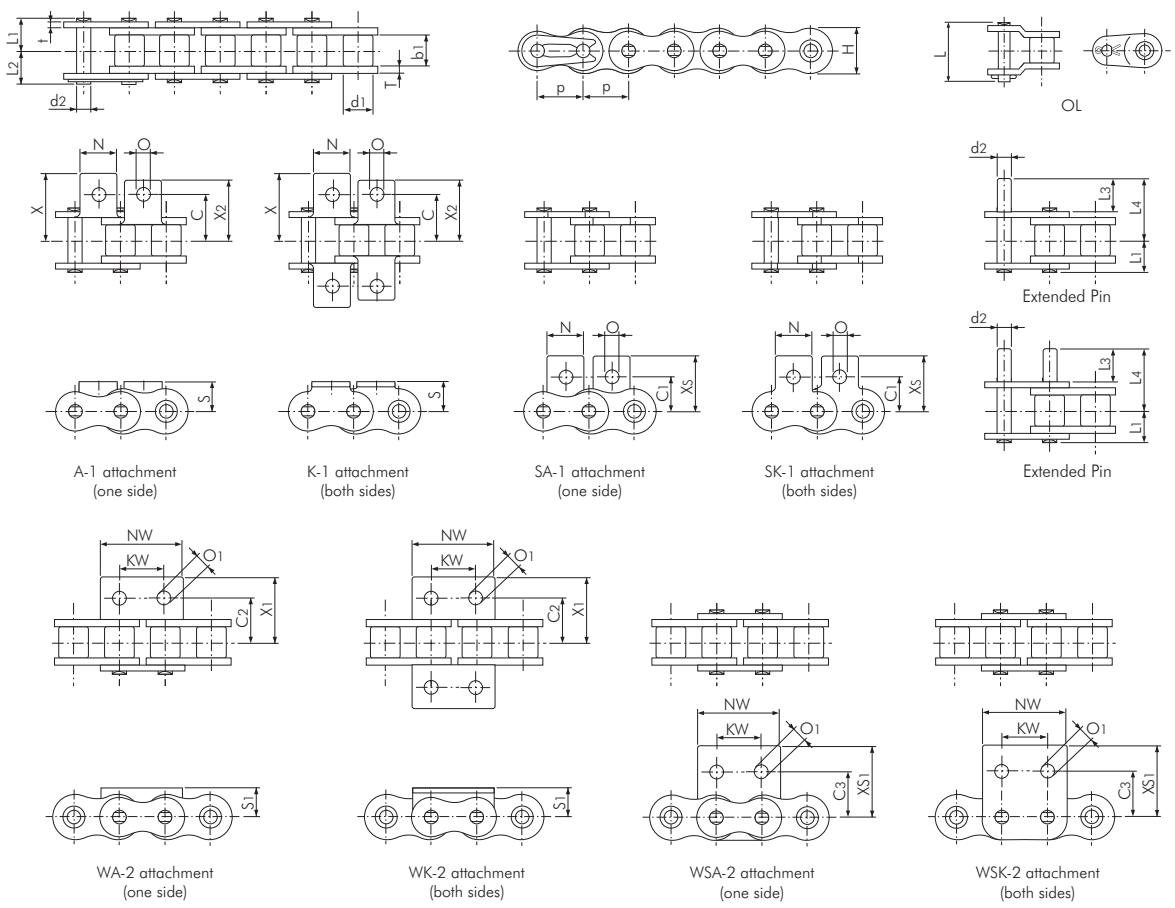

BS Single Pitch SS Chain

Dimensions in mm

TSUBAKI Chain No.	Pitch p	Roller Diameter d1	Inner Width b1	Pin Diameter d2	Pin Length L1	Pin Length L2	Pin Length L3	Pin Length L4	Pin Length L	Link Plate Thickness T	Link Plate Thickness t	Link Plate Height H (max.)	Max. Allowable Load acc. to Tsubaki kN	Approx. Mass kg/m
RF06B-SS	9.525 (3/8")	6.35	5.72	3.28	6.10	7.70	10.90	16.30	15.10	1.30	1.00	8.20	0.27	0.39
RS08B-SS	12.70 (1/2")	8.51	7.75	4.45	8.35	10.05	14.70	22.20	20.05	1.50	1.50	12.00	0.48	0.70
RS10B-SS	15.875 (5/8")	10.16	9.65	5.08	9.55	11.25	17.80	26.15	22.90	1.50	1.50	14.70	0.66	0.95
RS12B-SS	19.05 (3/4")	12.07	11.68	5.72	11.10	13.00	20.90	30.70	26.70	1.80	1.80	16.10	0.87	1.25
RS16B-SS	25.40 (1")	15.88	17.02	8.28	17.75	19.95	33.20	49.35	43.70	4.00	3.20	21.00	2.10	2.70

TSUBAKI Chain No.	Attachment Dimensions C	C1	C2	C3	KW	N	NW	O	O1	S	S1	X	X1	X2	XS	XS1	Attachment Mass A SA kg/att.	K SK kg/att.	WA WSA kg/att.	WK WSK kg/att.	Ext. Pin kg/att.
RF06B-SS	9.50	9.50	-	-	-	8.50	-	3.50	-	6.50	-	14.10	-	-	14.30	-	0.002	0.004	-	-	0.001
RS08B-SS	11.90	12.70	12.70	13.10	12.70	11.40	24.60	4.20	4.90	8.90	8.90	19.05	20.30	17.15	19.30	20.70	0.002	0.004	0.005	0.010	0.001
RS10B-SS	15.90	15.90	15.90	16.60	15.90	12.70	30.00	5.00	5.00	10.20	10.20	22.25	22.85	20.60	22.90	23.60	0.003	0.006	0.006	0.012	0.002
RS12B-SS	19.05	22.20	17.45	17.60	19.10	16.50	34.80	7.10	5.50	13.50	11.40	29.85	25.65	27.80	32.05	25.75	0.006	0.012	0.009	0.018	0.003
RS16B-SS	23.80	23.90	28.60	26.00	25.40	24.30	46.00	6.70	8.10	15.20	15.90	37.35	39.25	34.40	34.10	36.70	0.014	0.028	0.030	0.060	0.008

Note:

1. RF06B-SS chain has flat-shaped link plates.
2. For details on corrosion resistance selection, please consult our Corrosion Resistance Guide in this catalogue.

BS ATTACHMENT CHAIN FOR CORROSIVE ENVIRONMENTS

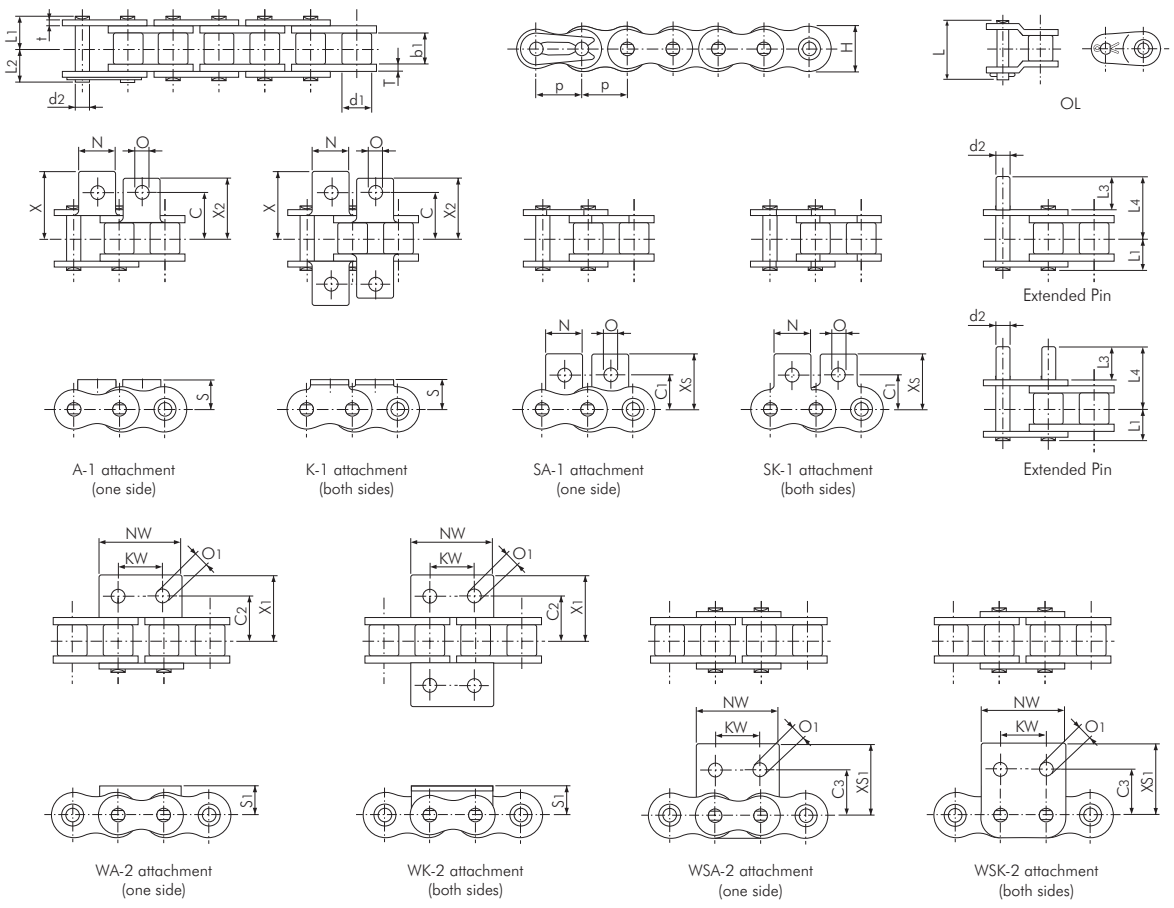

BS Single Pitch N.E.P. Chain

Dimensions in mm

TSUBAKI Chain No.	Pitch p		Roller Diameter d1	Inner Width b1	Pin Diameter d2	Pin Length L1	Pin Length L2	Pin Length L3	Pin Length L4	Pin Length L	Link Plate Thickness T	Link Plate Thickness t	Link Plate Height H (max.)	Approx. Mass kg/m
RF06B-NEP	9.525	(3/8")	6.35	5.72	3.27	6.10	7.70	10.90	16.30	15.10	1.30	1.00	8.20	0.39
RS08B-NEP	12.70	(1/2")	8.51	7.75	4.45	8.40	10.00	14.70	22.20	18.60	1.60	1.60	11.80	0.70
RS10B-NEP	15.875	(5/8")	10.16	9.65	5.08	9.55	11.25	17.80	26.15	20.80	1.50	1.50	14.70	0.95
RS12B-NEP	19.05	(3/4")	12.07	11.68	5.72	11.10	13.00	20.80	30.60	24.40	1.80	1.80	16.10	1.25
RS16B-NEP	25.40	(1")	15.88	17.02	8.28	17.75	19.95	33.20	49.35	41.10	4.00	3.20	21.00	2.70
RS20B-NEP	31.75	(1 1/4")	19.05	19.56	10.19	19.90	23.10	38.40	56.90	46.60	4.40	3.40	26.00	3.85

TSUBAKI Chain No.	Attachment Dimensions C	C1	C2	C3	KW	N	NW	O	O1	S	S1	X	X1	X2	XS	XS1	Attachment Mass A SA kg/att.	K SK kg/att.	WA WSA kg/att.	WK WSK kg/att.	Ext. Pin kg/att.
RF06B-NEP	9.50	9.50	-	-	-	8.50	-	3.50	-	6.50	-	14.10	-	-	14.30	-	0.002	0.004	-	-	0.001
RS08B-NEP	11.90	12.70	12.70	13.10	12.70	11.40	24.60	4.20	4.90	8.90	8.90	19.05	20.30	17.15	19.30	20.70	0.002	0.004	0.005	0.010	0.001
RS10B-NEP	15.90	15.90	15.90	16.60	15.90	12.70	30.00	5.00	5.00	10.20	10.20	22.25	22.85	20.60	22.90	23.60	0.003	0.006	0.006	0.012	0.002
RS12B-NEP	19.05	22.20	17.45	17.60	19.10	16.50	34.80	7.10	5.50	13.50	11.40	29.85	25.65	27.80	32.05	25.75	0.006	0.012	0.009	0.018	0.003
RS16B-NEP	23.80	23.90	28.60	26.00	25.40	24.30	46.00	6.70	8.10	15.20	15.90	37.35	39.25	34.40	34.10	36.70	0.014	0.028	0.030	0.060	0.008
RS20B-NEP	31.75	31.80	-	-	-	25.40	-	8.70	-	19.80	-	44.85	-	-	44.00	-	0.027	0.054	-	-	0.014

Note:

1. RF06B-NEP chain has flat shaped link plates.
2. For details on corrosion resistance selection, please consult our Corrosion Resistance Guide in this catalogue.

ANSI LAMBDA LUBE FREE ATTACHMENT CHAIN

TSUBAKI's LAMBDA Chains were the first in the industry to use a special oil- impregnated bush. Since their launch in 1988, they have been adopted for diverse industries and applications, and their performance has been highly rated. TSUBAKI has a wide line-up of lube-free, long life products that help customers reduce costs.

Technical Evolution

As a pioneer in the lube-free chain market, TSUBAKI will reveal some of the key elements behind ANSI LAMBDA's outstanding performance:

Sintered Bush

A special oil-impregnated sintered bush in combination with a special coated pin for long-term internal lubrication is the secret of TSUBAKI ANSI LAMBDA's long economic life and wear resistance.

Temperature and Lubrication

TSUBAKI ANSI LAMBDA has outstanding performance in temperatures up to +150°C.

For temperatures above +150°C: Due to the special NSF-H1 certified lubrication impregnated bushes, TSUBAKI ANSI LAMBDA KF Series is usable in a wide temperature range (from -10°C to +230°C), and for food product applications while at the same time being kind to the environment.
Please consult TSUBAKI for more detailed information.

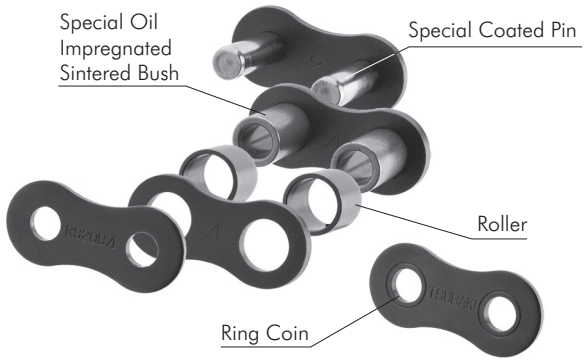

Fig. 23 Basic Construction

Advantages

TSUBAKI has enhanced the ANSI LAMBDA with the following advantages:

Save Maintenance Costs

No expensive labour costs as it is not required to manually lubricate this chain.

Save Purchasing Costs

Lower frequency of purchasing due to the high quality of the chain and its long economic life. No purchasing of lubricants or lubrication systems necessary.

Higher Productivity

No unforeseen downtime due to chain breakage.
Less time required for maintenance and therefore more time for production.

Environmental Friendly

Applications run clean thus reducing the risk of contaminating products, machines, floor etc.

Inter-Changeability

ANSI LAMBDA Attachment chain is interchangeable with standard ANSI roller chains. However, as the pins are longer than those of the standard ANSI roller chain, please make sure that there is no interference with the machine.

Standard Product Range

The product range for our standard LAMBDA attachment chains is:

- ANSI Single Pitch LAMBDA chain + standard attachments
- ANSI Single Pitch LAMBDA HP Hollow Pin chain
- ANSI Double Pitch LAMBDA chain
- BS Single Pitch LAMBDA chain + standard attachments
- BS Single Pitch LAMBDA RF chain with flat shaped link plates

Special attachments can be designed and manufactured to meet your specific requirements.



ANSI LAMBDA LUBE FREE ATTACHMENT CHAIN

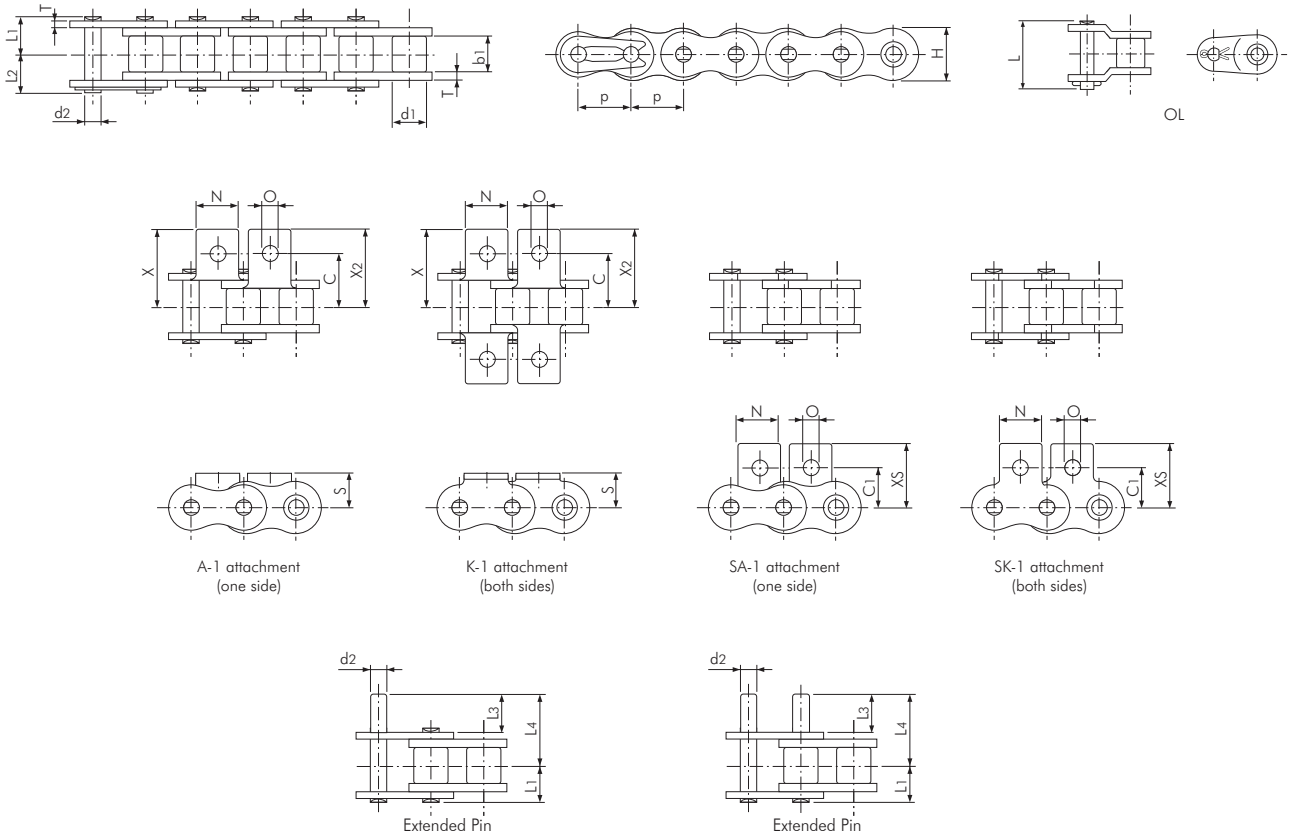

ANSI Single Pitch LAMBDA Chain

Dimensions in mm

TSUBAKI Chain No.	Pitch p		Roller Diameter d1	Inner Width b1	Pin Diameter d2	Pin Length L1	Pin Length L2	Pin Length L3	Pin Length L4	Pin Length L	Link Plate Thickness T	Link Plate Height H (max.)	Approx. Mass kg/m
RS40-LMC	12.70	(1/2")	7.92	7.95	3.97	8.25	9.95	9.50	16.75	18.20	1.50	12.00	0.64
RS50-LMC	15.875	(5/8")	10.16	9.53	5.09	10.30	12.00	11.90	21.00	22.60	2.00	15.00	1.04
RS60-LMC	19.05	(3/4")	11.91	12.70	5.96	12.85	14.75	14.30	25.75	28.20	2.40	18.10	1.53
RS80-LMC	25.40	(1")	15.88	15.88	7.94	16.25	19.25	19.10	33.85	36.60	3.20	24.10	2.66

TSUBAKI Chain No.	Attachment Dimensions C	C1	N	O	S	X	X2	XS	Attachment Mass A SA kg/att.	K SK kg/att.	Ext. Pin kg/att.
RS40-LMC	12.70	12.70	9.50	3.60	8.00	17.80	17.80	17.40	0.002	0.004	0.001
RS50-LMC	15.90	15.90	12.70	5.20	10.30	23.40	23.40	23.05	0.003	0.006	0.002
RS60-LMC	19.05	18.30	15.90	5.20	11.90	28.20	28.20	26.85	0.007	0.014	0.003
RS80-LMC	25.40	24.60	19.10	6.80	15.90	36.60	36.60	35.45	0.013	0.026	0.007

Note:

1. Connecting links are clip type for sizes up to RS60-LMC, and cotter type for size RS80-LMC.
2. Drive and Conveyor series LAMBDA chains cannot be intercoupled or interchanged.
3. Standard ANSI sprockets can be used.
4. LAMBDA Conveyor Chain cannot be used as a drive chain. This chain is designed for conveyor applications where speeds are lower and center distances are larger than drive chain applications.
5. Special attachments are available on request.

ANSI LAMBDA LUBE FREE ATTACHMENT CHAIN

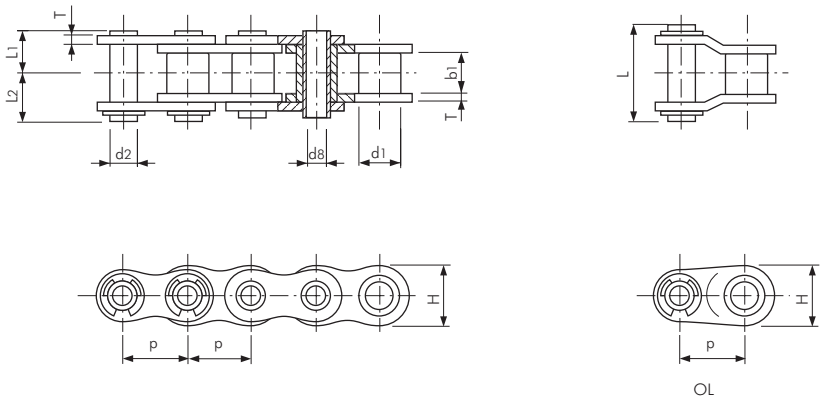

ANSI Single Pitch LAMBDA Hollow Pin (HP) Chain

Dimensions in mm

TSUBAKI Chain No.	Pitch p		Bush Diameter d1	Inner Width b1	Pin					Link Plate		Approx. Mass kg/m
					Diameter d2	Hollow Pin d8	Length L1	Length L2	Length L	Thickness T	Height H (max.)	
RS40-LMC-HP	12.70	(1/2")	7.92	7.95	5.68	4.00	8.00	9.50	19.10	1.50	12.00	0.53
RS50-LMC-HP	15.875	(5/8")	10.16	9.53	7.22	5.12	10.05	11.65	23.40	2.00	15.00	0.86
RS60-LMC-HP	19.05	(3/4")	11.91	12.70	8.38	5.99	12.55	14.25	28.70	2.40	18.10	1.27

Note:

1. ANSI LMC-HP chain is rollerless chain (only bush).

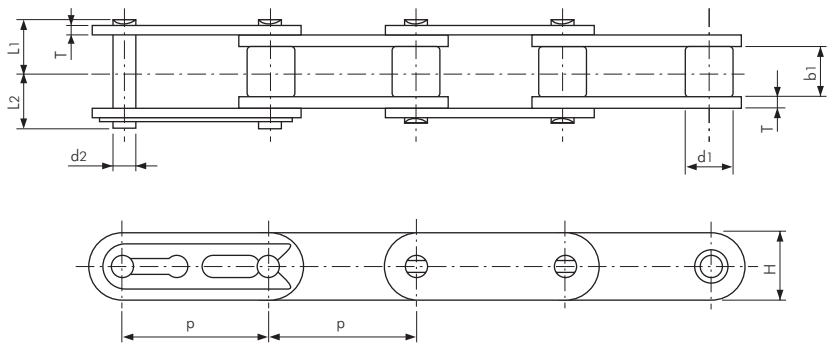

S type roller

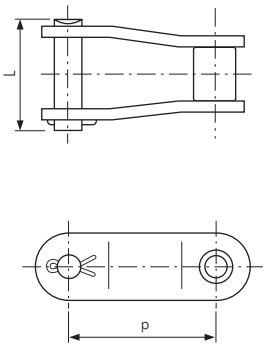

OL

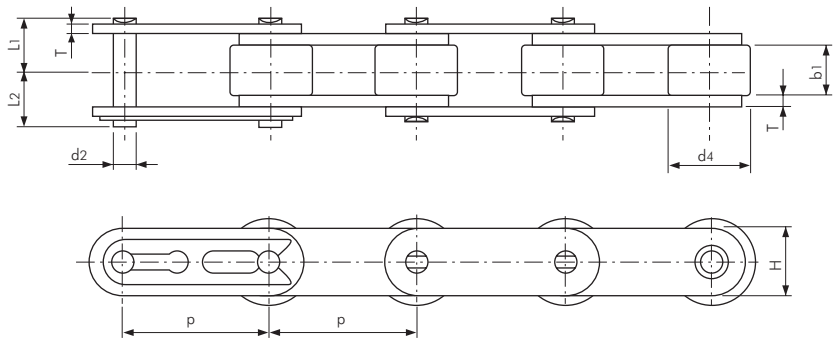

R type roller

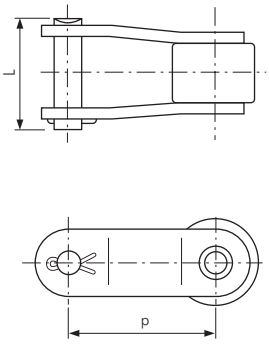

OL

ANSI Double Pitch LAMBDA Chain

Dimensions in mm

TSUBAKI Chain No.	Pitch p		Inner Width b1	Roller S Roller d1	Roller R Roller d4	Pin Diameter d2	Pin Length L1	Pin Length L2	Pin Length L	Link Plate Thickness T	Link Plate Height H	Approx. Mass S Roller kg/m	Approx. Mass R Roller kg/m
RF2040-LMC	25.40	(1″)	7.95	7.92	15.88	3.97	8.25	9.95	18.20	1.50	12.00	0.51	0.87
RF2050-LMC	31.75	(1 1/4″)	9.53	10.16	19.05	5.09	10.30	12.00	22.60	2.00	15.00	0.84	1.30
RF2060-LMC	38.10	(1 1/2″)	12.70	11.91	22.23	5.96	14.55	16.55	31.50	3.20	17.20	1.51	2.19

Note:

1. Connecting links are clip type.
2. LAMBDA Conveyor Chain cannot be used as a drive chain. This chain is designed for conveyor applications where speeds are lower and center distances are larger than drive chain applications.
3. Special attachments are available on request.
4. Chain with S type roller is indicated as RF2040S-LMC.
5. Chain with R type roller is indicated as RF2040R-LMC.

ANSI STANDARD ATTACHMENT CHAIN

For standard applications, TSUBAKI can provide you with an outstanding Attachment Chain. This chain is manufactured in accordance with the American Standards.

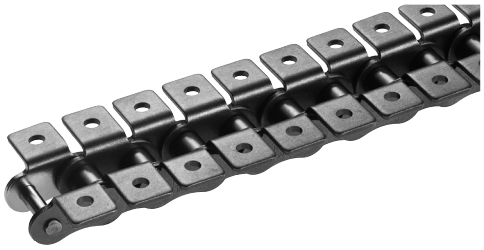

Fig. 24 K-1 Attachment

Construction

This chain is based on standard ANSI roller chain with attachments added for conveying.

Key Features

- Due to the small pitch of these chains, the drive design is smaller.
- Usually sprockets with a large number of teeth are used. The chain speed does not vary significantly as the chain engages with sprockets. With less impact, there is also less noise generated as a result of the impact between the roller and sprocket tooth.
- These chains may be used for high-speed conveyors.
- A wide variety of standard attachments and special attachments is available for this chain series.

Customised Pre-Lubrication Service

Proper lubrication is the key to extend the life and improve the performance of a chain. In order to get the best performance in general applications (-10°C to +60°C), all ANSI drive chains are pre-lubricated. ANSI attachment chains however are NOT pre-lubricated, but have been treated with rust preventive oil and therefore need to be lubricated before the installation of the chain. The reason for TSUBAKI not to lubricate the ANSI attachment chains is due to the fact that attachment chains often have to function in various environments where standard lubrication cannot be used.

For special applications, TSUBAKI can provide attachment chains, pre-lubricated with a special lubricant at the customer's request.

- High temperature
- Low temperature
- Food safe
- Outdoor exposure
- Dusty environment

Please consult TSUBAKI for more detailed information.

Application Example

ANSI Standard attachment chain is used for short conveyors of usually less than 10 metres for small and light products. This chain is also suitable for conditions under which noise should be avoided.

Standard Product Range

The product range for our standard attachment chains is:

- ANSI Single Pitch Standard chain + standard attachments
- ANSI Single Pitch HP Hollow Pin chain
- ANSI Single Pitch CU Curved chain
- ANSI Double Pitch Standard chain + standard attachments
- ANSI Double Pitch HP Hollow Pin chain
- BS Single Pitch Standard chain + standard attachments
- BS Single Pitch RF chain with flat shaped link plates

Special attachments can be designed and manufactured to meet your specific requirements.



Fig. 25 Double Pitch A-2 Attachment



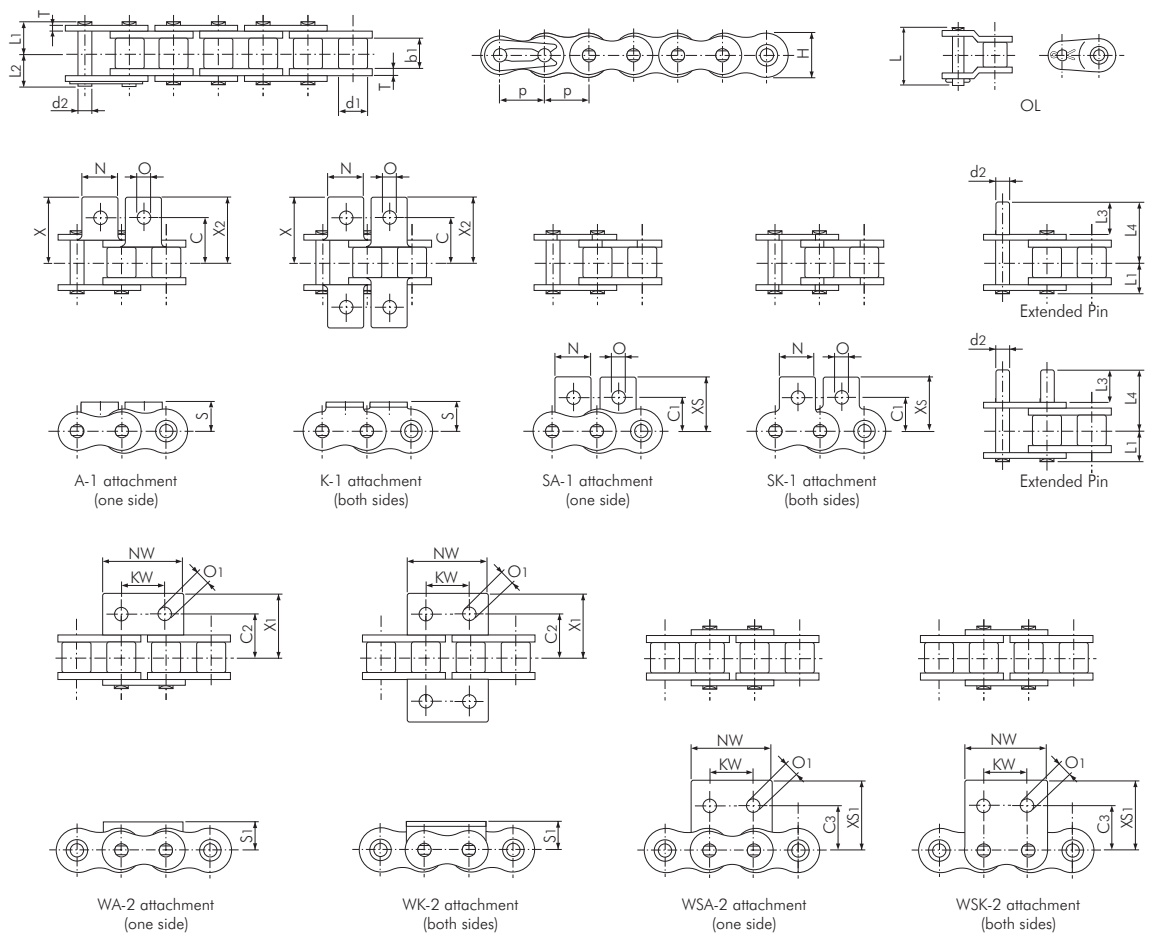

ANSI Single Pitch Standard Chain

Dimensions in mm

TSUBAKI Chain No.	Pitch p		Roller Diameter d1	Inner Width b1	Pin Diameter d2	Pin Length L1	Pin Length L2	Pin Length L3	Pin Length L4	Pin Length L	Link Plate Thickness T	Link Plate Height H (max.)	Approx. Mass kg/m
RS35	9.525	(3/8")	5.08	4.78	3.59	5.85	6.85	9.50	14.60	13.50	1.25	9.00	0.33
RS40	12.70	(1/2")	7.92	7.95	3.97	8.25	9.95	9.50	16.75	18.20	1.50	12.00	0.64
RS50	15.875	(5/8")	10.16	9.53	5.09	10.30	12.00	11.90	21.00	22.60	2.00	15.00	1.04
RS60	19.05	(3/4")	11.91	12.70	5.96	12.85	14.75	14.30	25.75	28.20	2.40	18.10	1.53
RS80	25.40	(1")	15.88	15.88	7.94	16.25	19.25	19.10	33.85	36.60	3.20	24.10	2.66

TSUBAKI Chain No.	Attachment Dimensions C	C1	C2	C3	KW	N	NW	O	O1	S	S1	X	X1	X2	XS	XS1	Attachment Mass A SA kg/att.	K SK kg/att.	WA WSA kg/att.	WK WSK kg/att.	Ext. Pin kg/att.
RS35	9.50	9.50	9.50	9.50	9.50	7.90	17.30	3.40	2.60	6.35	6.35	14.30	14.30	14.30	14.55	14.55	0.0008	0.0016	0.001	0.002	0.001
RS40	12.70	12.70	12.70	12.70	9.50	9.50	23.00	3.60	4.50	8.00	8.00	17.80	17.80	17.80	17.40	17.40	0.002	0.004	0.003	0.006	0.001
RS50	15.90	15.90	15.90	15.90	11.90	12.70	28.80	5.20	5.50	10.30	10.30	23.40	23.40	23.40	23.05	23.05	0.003	0.006	0.007	0.014	0.002
RS60	19.05	18.30	19.05	18.30	14.30	15.90	34.60	5.20	6.60	11.90	11.90	28.20	28.20	28.20	26.85	26.85	0.007	0.014	0.012	0.024	0.003
RS80	25.40	24.60	25.40	24.60	19.10	19.10	46.10	6.80	9.00	15.90	15.90	36.60	36.60	36.60	35.45	35.45	0.013	0.026	0.028	0.056	0.007

Note:

1. RS35 is rollerless chain (only bush). The figure shown is the bush diameter.
2. Connecting links are clip type for sizes up to RS60, and cotter type for size RS80.

ANSI STANDARD ATTACHMENT CHAIN

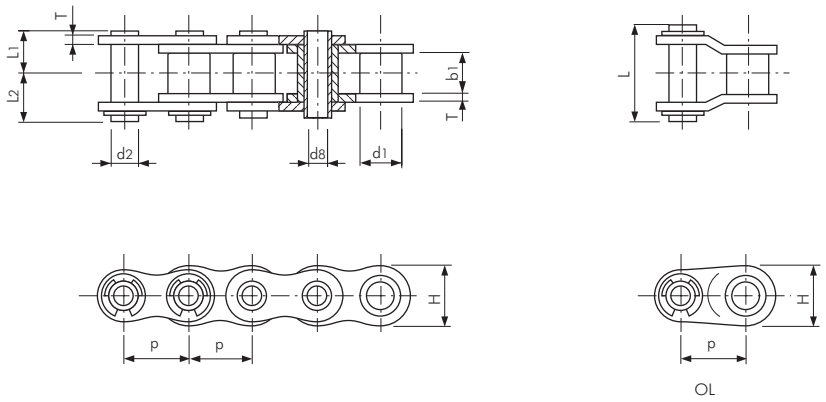

ANSI Single Pitch Hollow Pin (HP) Chain

Dimensions in mm

TSUBAKI Chain No.	Pitch p		Bush Diameter d1	Inner Width b1	Pin Diameter d2	Pin Hollow Pin d8	Pin Length L1	Pin Length L2	Pin Length L	Link Plate Thickness T	Link Plate Height H (max.)	Approx. Mass kg/m
RS40-HP	12.70	(1/2")	7.92	7.95	5.68	4.00	8.00	9.50	19.10	1.50	12.00	0.53
RS50-HP	15.875	(5/8")	10.16	9.53	7.22	5.12	10.05	11.65	23.40	2.00	15.00	0.86
RS60-HP	19.05	(3/4")	11.91	12.70	8.38	5.99	12.55	14.25	28.70	2.40	18.10	1.27
RS80-HP	25.40	(1")	15.88	15.88	11.38	8.02	16.25	17.80	35.70	3.20	24.10	2.15

Note:

1. ANSI HP chain is rollerless chain (only bush).

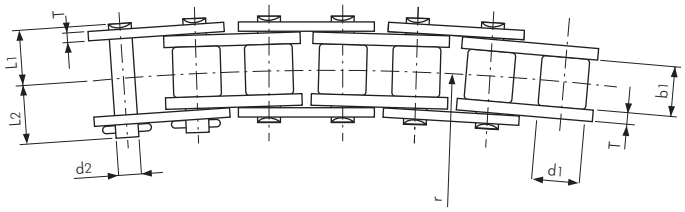

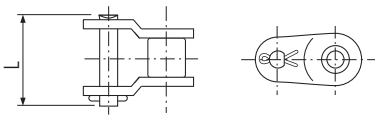

OL

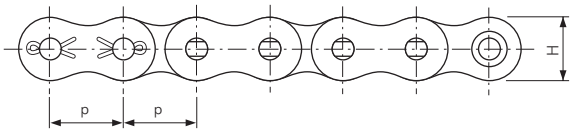

ANSI Single Pitch Curved (CU) Chain

Dimensions in mm

TSUBAKI Chain No.	Pitch p		Roller Diameter d1	Inner Width b1	Pin Diameter d2	Pin Length L1	Pin Length L2	Link Plate Thickness T	Link Plate Height H (max.)	Minimum Bending Radius r	Approx. Mass kg/m
RS40-CU	12.70	(1/2")	7.92	7.95	3.97	8.45	9.75	1.50	12.00	350	0.61
RS50-CU	15.875	(5/8")	10.16	9.53	5.09	10.60	12.40	2.00	15.00	400	1.01
RS60-CU	19.05	(3/4")	11.91	12.70	5.96	13.25	15.05	2.40	18.10	500	1.40
RS80-CU	25.40	(1")	15.88	15.88	7.94	16.75	20.05	3.20	24.10	600	2.47

ANSI STANDARD ATTACHMENT CHAIN

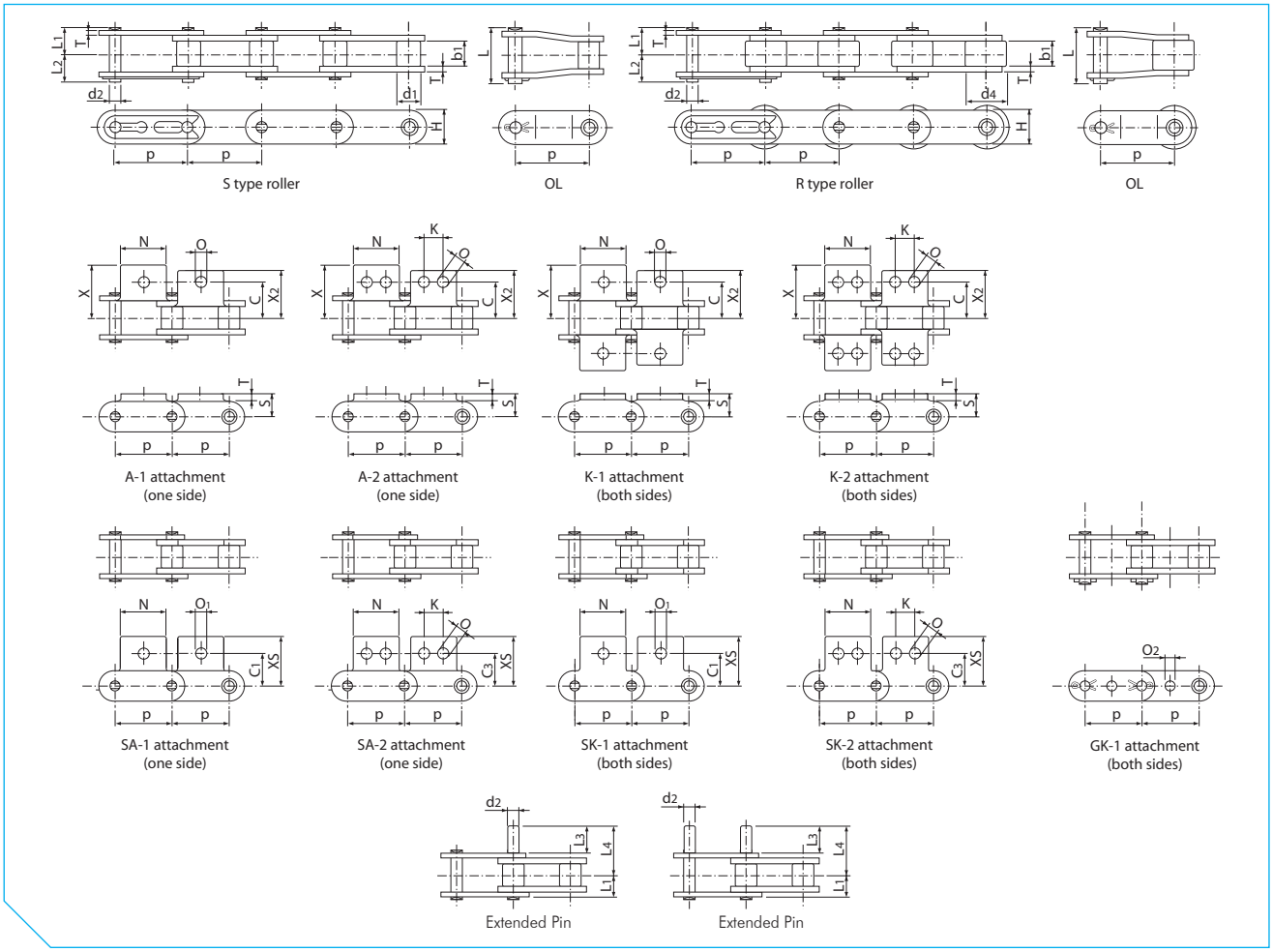

ANSI Double Pitch Standard Chain

Dimensions in mm

TSUBAKI Chain No.	Pitch p		Inner Width b1	Roller S Roller d1	Roller R Roller d4	Pin Diameter d2	Pin Length L1	Pin Length L2	Pin Length L3	Pin Length L4	Pin Length L	Link Plate Thickness T	Link Plate Height H	Approx. Mass S Roller kg/m	Approx. Mass R Roller kg/m
RF2040	25.40	(1")	7.95	7.92	15.88	3.97	8.25	9.95	9.50	16.75	18.20	1.50	12.00	0.51	0.87
RF2050	31.75	(1 1/4")	9.53	10.16	19.05	5.09	10.30	12.00	11.90	21.00	22.60	2.00	15.00	0.84	1.30
RF2060	38.10	(1 1/2")	12.70	11.91	22.23	5.96	14.55	16.55	14.30	27.45	31.50	3.20	17.20	1.51	2.19
RF2080	50.80	(2")	15.88	15.88	28.58	7.94	18.30	20.90	19.10	35.50	39.90	4.00	23.00	2.41	3.52
RF2100	63.50	(2 1/2")	19.05	19.05	39.69	9.54	21.80	24.50	23.80	43.40	47.50	4.80	28.60	3.54	5.80

TSUBAKI Chain No.	Attachment Dimensions C	C1	C3	K	N	O	O1	O2	S	X	X2	XS	Attachment Mass A SA kg/att.	Attachment Mass K SK kg/att.	Attachment Mass Ext. Pin kg/att.
RF2040	12.70	11.10	13.60	9.50	19.10	3.60	5.20	4.10	9.10	19.30	17.60	19.80	0.003	0.006	0.001
RF2050	15.90	14.30	15.90	11.90	23.80	5.20	6.80	5.10	11.10	24.20	22.00	24.60	0.006	0.012	0.002
RF2060	21.45	17.50	19.10	14.30	28.60	5.20	8.70	6.10	14.70	31.50	28.20	30.60	0.017	0.034	0.003
RF2080	27.80	22.20	25.40	19.10	38.10	6.80	10.30	8.10	19.10	40.70	36.60	40.50	0.032	0.064	0.007
RF2100	33.35	28.60	31.80	23.80	47.60	8.70	14.30	10.10	23.40	49.90	44.90	50.40	0.060	0.120	0.012

Note:

1. Connecting links are clip type for sizes up to RF2060, and cotter type for size RF2080 to RF2100; All GK-1 attachments are cotter type.
2. R-Roller is not available with GK-1 attachment.
3. Special attachments are available on request.
4. Chain with S type roller is indicated as RF2040S.
5. Chain with R type roller is indicated as RF2040R.

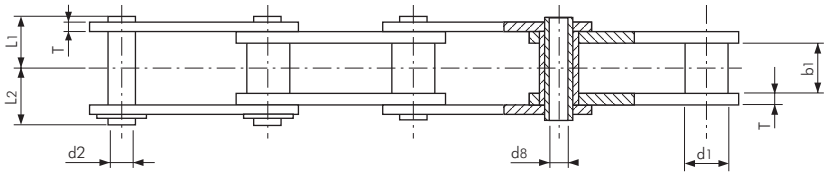

S type bush

OL

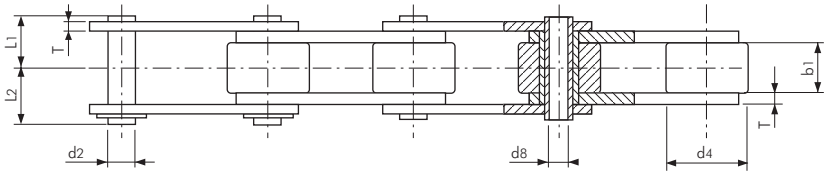

R type roller

OL

ANSI Double Pitch Hollow Pin (HP) Chain

Dimensions in mm

TSUBAKI Chain No.	Pitch p		Inner Width b1	S Bush d1	R Roller d4	Pin					Link Plate		Approx. Mass	
						Diameter d2	Hollow Pin d8	Length L1	Length L2	Length L	Thickness T	Height H	S Bush kg/m	R Roller kg/m
RF2040-HP	25.40	(1″)	7.95	7.92	15.88	5.68	4.00	8.00	9.50	19.10	1.50	12.00	0.46	0.82
RF2050-HP	31.75	(1 1/4″)	9.53	10.16	19.05	7.22	5.12	10.05	11.65	23.40	2.00	15.00	0.75	1.21
RF2060-HP	38.10	(1 1/2″)	12.70	11.91	22.23	8.38	5.99	12.55	14.25	28.70	2.40	17.20	1.38	2.06
RF2080-HP	50.80	(2″)	15.88	15.88	28.58	11.38	8.02	16.25	17.80	35.70	3.20	23.00	1.80	2.81

Note:

1. Chain with S type bush is indicated as RF2040S-HP.
2. Chain with R type roller is indicated as RF2040R-HP.

ANSI ATTACHMENT CHAIN FOR CORROSIVE ENVIRONMENTS

Whether your operation requires a sanitary environment, is exposed to corrosive chemicals, is heated to extreme temperatures, runs through a freezer, is exposed to the outdoors or is affected by excessive moisture: our specially designed and tested chains will outlast your current chains and contribute to a cost effective application.

Corrosion Resistant Chain (Engineering Plastic base)

ANSI P Plastic Chain

ANSI P Chain consists of polyacetal chain links and SUS304 equivalent stainless steel pins and operates with standard roller chain sprockets. Based on power transmission roller chain, TSUBAKI ANSI P chain has a flat top side for conveying use. The combination of engineering plastic and stainless steel makes it a lube-free operation chain. For special environments special plastics are available on request (electro-conductive, chemical resistant and heat resistant series). The working temperature range is: -20°C to +80°C. For details on corrosion resistance, please refer to the table in the back of this catalogue.

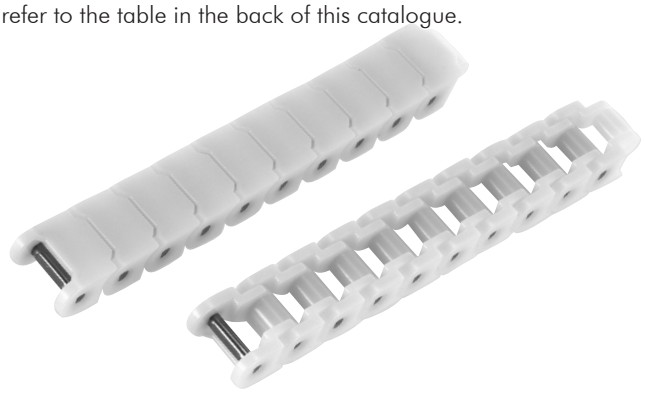

Fig. 26 ANSI P Chain

Corrosion Resistant Chain (Stainless Steel base)

ANSI PC Engineering Plastic Combination Chain

The pins, outer plates and attachments of these chains are made of SUS304 equivalent (spring clips SUS301). White Engineering Plastic is used for the inner link. This combination makes it lube-free, low noise (5 dB lower than ANSI standard roller chain) and lightweight (50% lighter than ANSI standard roller chain). The working temperature range is: -20°C to +80°C. For details on corrosion resistance, please refer to the table in the back of this catalogue.

ANSI SS Stainless Steel Chain

All basic components of this chain are made of SUS304 equivalent Stainless Steel (except the spring clips, which are made of SUS301). This chain can be used in special environments such as underwater, acidic and alkaline applications. It can also be used in high and low temperatures (-20°C to +400°C). SUS304 equivalent is only marginally magnetic, which is a result of the cold-forging process. For details on corrosion resistance, please refer to the table in the back of this catalogue.

Standard Product Range

TSUBAKI has a wide variety of chains for corrosive environments; our standard product range is as follows:

- ANSI Single pitch PC chain + standard attachments
- ANSI Single pitch P Plastic chain
- ANSI Single pitch SS chain + standard attachments
- ANSI Single pitch SS HP Hollow Pin chain
- ANSI Double Pitch SS chain + standard attachments
- ANSI Double Pitch SS HP Hollow Pin chain
- BS Single pitch PC chain + standard attachments
- BS Single pitch SS chain + standard attachments
- BS Single pitch N.E.P. chain + standard attachments

Special attachments can be designed and manufactured to meet your specific requirements.

ANSI ATTACHMENT CHAIN FOR CORROSIVE ENVIRONMENTS

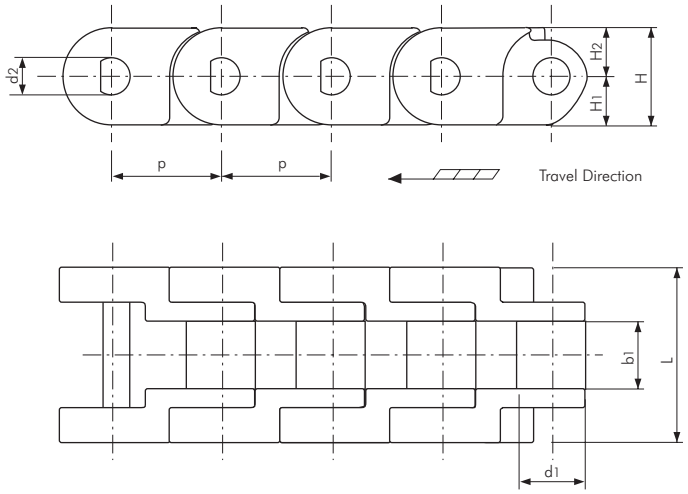

ANSI Single Pitch P Chain

Dimensions in mm

TSUBAKI Chain No.	Pitch p		Bush Diameter d1	Inner Width b1	Pin Diameter d2	Pin Length L	Chain Height H	Chain Height H1	Chain Height H2	Approx. Mass kg/m
RSP-40	12.70	(1/2")	7.92	7.95	4.00	20.00	12.70	6.00	6.70	0.36
RSP-60	19.05	(3/4")	11.91	12.70	6.00	30.00	17.30	8.50	8.80	0.72

Note:

1. Standard ANSI sprockets can be used.
2. For details on corrosion resistance selection, please consult our Corrosion Resistance Guide in this catalogue.

ANSI ATTACHMENT CHAIN FOR CORROSIVE ENVIRONMENTS

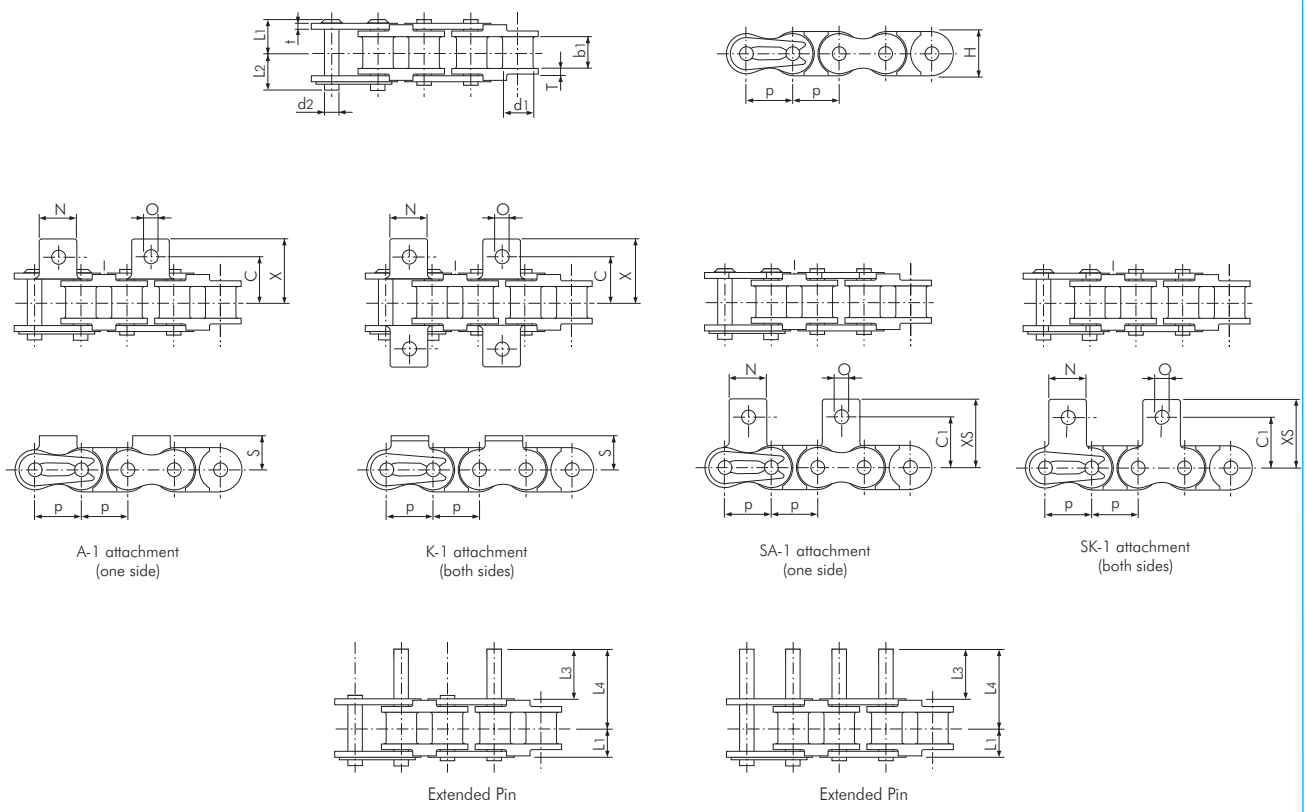

ANSI Single Pitch PC Chain

Dimensions in mm

TSUBAKI Chain No.	Pitch p		Bush Diameter d1	Inner Width b1	Pin Diameter d2	Pin Length L1	Pin Length L2	Pin Length L3	Pin Length L4	Link Plate Thickness T	Link Plate Thickness t	Link Plate Height H (max.)	Max. Alowable. Load acc. to Tsubaki kN	Approx. Mass kg/m
RS25-PC	6.35	(1/4")	3.30	3.18	2.31	4.50	5.50	-	-	1.30	0.75	6.00	0.08	0.095
RS35-PC	9.525	(3/8")	5.08	4.78	3.59	6.85	7.85	-	-	2.20	1.25	9.00	0.18	0.22
RS40-PC	12.70	(1/2")	7.92	7.95	3.97	8.25	9.95	9.40	16.75	1.50	1.50	12.00	0.44	0.39
RS50-PC	15.875	(5/8")	10.16	9.53	5.09	10.30	12.00	11.90	21.00	2.00	2.00	15.00	0.69	0.58
RS60-PC	19.05	(3/4")	11.91	12.70	5.96	12.85	14.75	14.20	25.75	2.40	2.40	18.10	0.88	0.82

TSUBAKI Chain No.	Attachment Dimensions C	C1	N	O	S	X	XS	Attachment Mass A SA kg/att.	K SK kg/att.	Ext. Pin kg/att.
RS25-PC	7.95	7.95	5.60	3.40	4.75	11.45	11.65	0.0006	0.0012	-
RS35-PC	10.50	9.50	7.90	3.40	6.35	15.35	14.55	0.0008	0.0016	-
RS40-PC	12.75	12.70	9.50	3.60	8.00	17.80	17.40	0.002	0.004	0.001
RS50-PC	16.00	15.90	12.70	5.20	10.30	23.55	23.05	0.003	0.006	0.002
RS60-PC	19.15	18.30	15.90	5.20	11.90	28.35	26.85	0.007	0.014	0.003

Note:

1. Make sure to check the chain load again when replacing Stainless Steel Chain with PC Chain.
2. Offset links are not available.
3. Use a chain tensioner with an idler sprocket to adjust chain tension.
4. Guide rails should support the underside of the inner links
5. For details on corrosion resistance selection, please consult our Corrosion Resistance Guide in this catalogue.

ANSI ATTACHMENT CHAIN FOR CORROSIVE ENVIRONMENTS

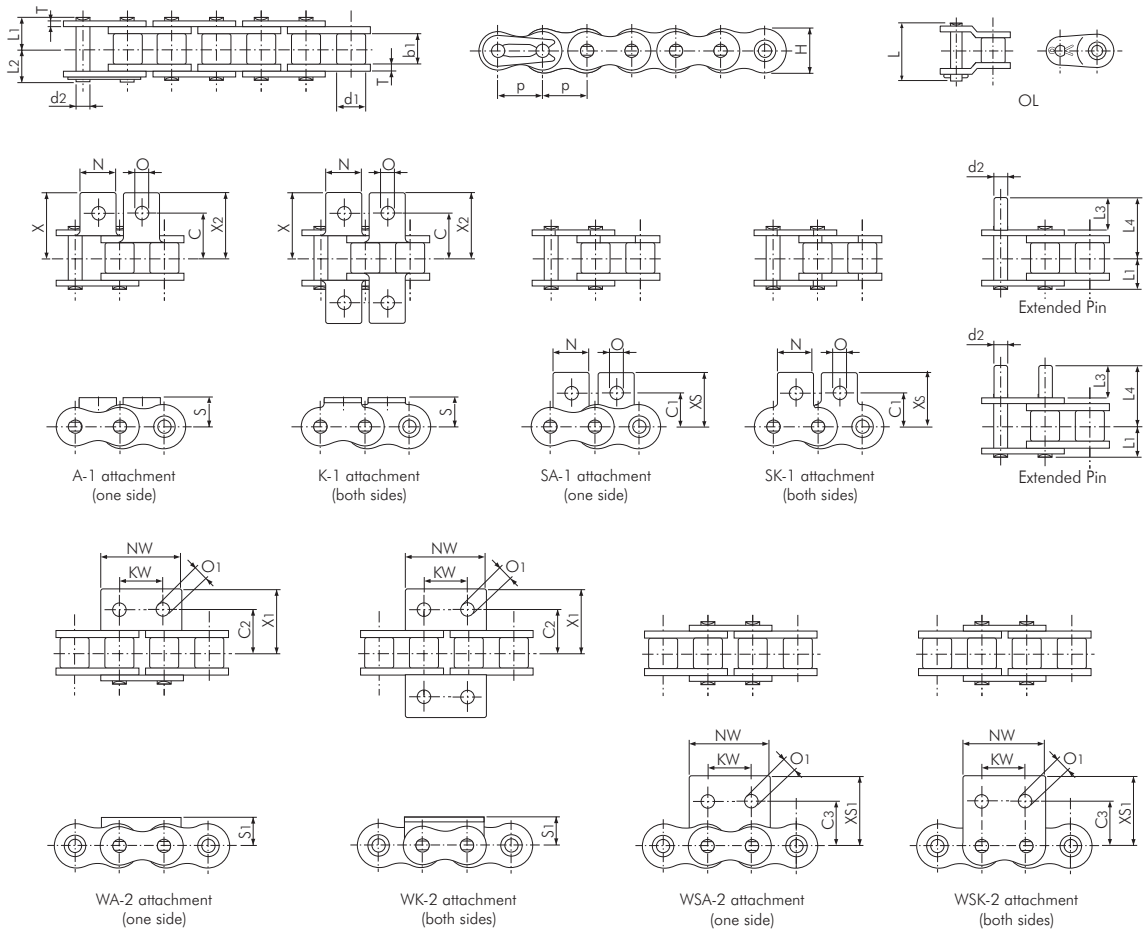

ANSI Single Pitch SS Chain

Dimensions in mm

TSUBAKI Chain No.	Pitch p		Roller Diameter d1	Inner Width b1	Pin Diameter d2	Pin Length L1	Pin Length L2	Pin Length L3	Pin Length L4	Pin Length L	Link Plate Thickness T	Link Plate Height H (max.)	Approx. Mass kg/m
RS40-SS	12.70	(1/2″)	7.92	7.95	3.97	8.25	9.95	9.50	16.75	18.20	1.50	12.00	0.64
RS50-SS	15.875	(5/8″)	10.16	9.53	5.09	10.30	12.00	11.90	21.00	22.60	2.00	15.00	1.04
RS60-SS	19.05	(3/4″)	11.91	12.70	5.96	12.85	14.75	14.30	25.75	28.20	2.40	18.10	1.53

TSUBAKI Chain No.	Attachment Dimensions C	C1	C2	C3	KW	N	NW	O	O1	S	S1	X	X1	X2	XS	XS1	Attachment Mass A SA kg/att.	K SK kg/att.	WA WSA kg/att.	WK WSK kg/att.	Ext. Pin kg/att.
RS40-SS	12.70	12.70	12.70	12.70	9.50	9.50	23.00	3.60	4.50	8.00	8.00	17.80	17.80	17.80	17.40	17.40	0.002	0.004	0.003	0.006	0.001
RS50-SS	15.90	15.90	15.90	15.90	11.90	12.70	28.80	5.20	5.50	10.30	10.30	23.40	23.40	23.40	23.05	23.05	0.003	0.006	0.007	0.014	0.002
RS60-SS	19.05	18.30	19.05	18.30	14.30	15.90	34.60	5.20	6.60	11.90	11.90	28.20	28.20	28.20	26.85	26.85	0.007	0.014	0.012	0.024	0.003

Note:

1. Connecting links are clip type.
2. For details on corrosion resistance selection, please consult our Corrosion Resistance Guide in this catalogue.

ANSI ATTACHMENT CHAIN FOR CORROSIVE ENVIRONMENTS

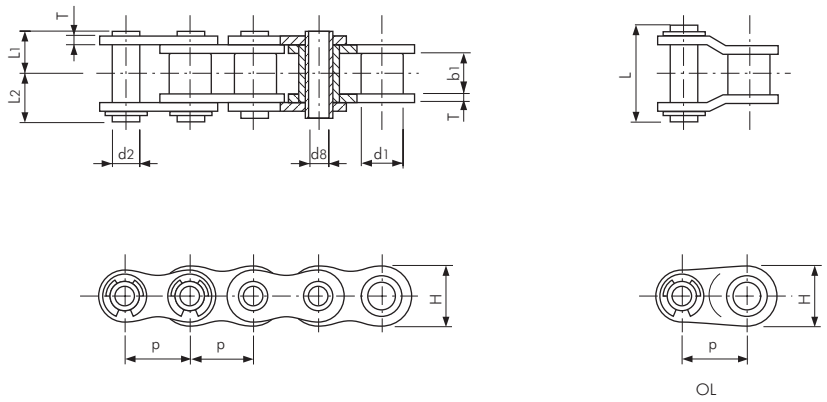

ANSI Single Pitch SS Hollow Pin (HP) Chain

Dimensions in mm

TSUBAKI Chain No.	Pitch p		Bush Diameter d1	Inner Width b1	Pin Diameter d2	Pin Hollow Pin d8	Pin Length L1	Pin Length L2	Pin Length L	Link Plate Thickness T	Link Plate Height H (max.)	Approx. Mass kg/m
RS40-HP-SS	12.70	(1/2")	7.92	7.95	5.68	4.00	8.00	9.50	19.10	1.50	12.00	0.53
RS50-HP-SS	15.875	(5/8")	10.16	9.53	7.22	5.12	10.05	11.65	23.40	2.00	15.00	0.86
RS60-HP-SS	19.05	(3/4")	11.91	12.70	8.38	5.99	12.55	14.25	28.70	2.40	18.10	1.27
RS80-HP-SS	25.40	(1")	15.88	15.88	11.38	8.02	16.25	17.80	35.70	3.20	24.10	2.15

Note:

1. ANSI HP-SS chain is rollerless chain (only bush).

ANSI ATTACHMENT CHAIN FOR CORROSIVE ENVIRONMENTS

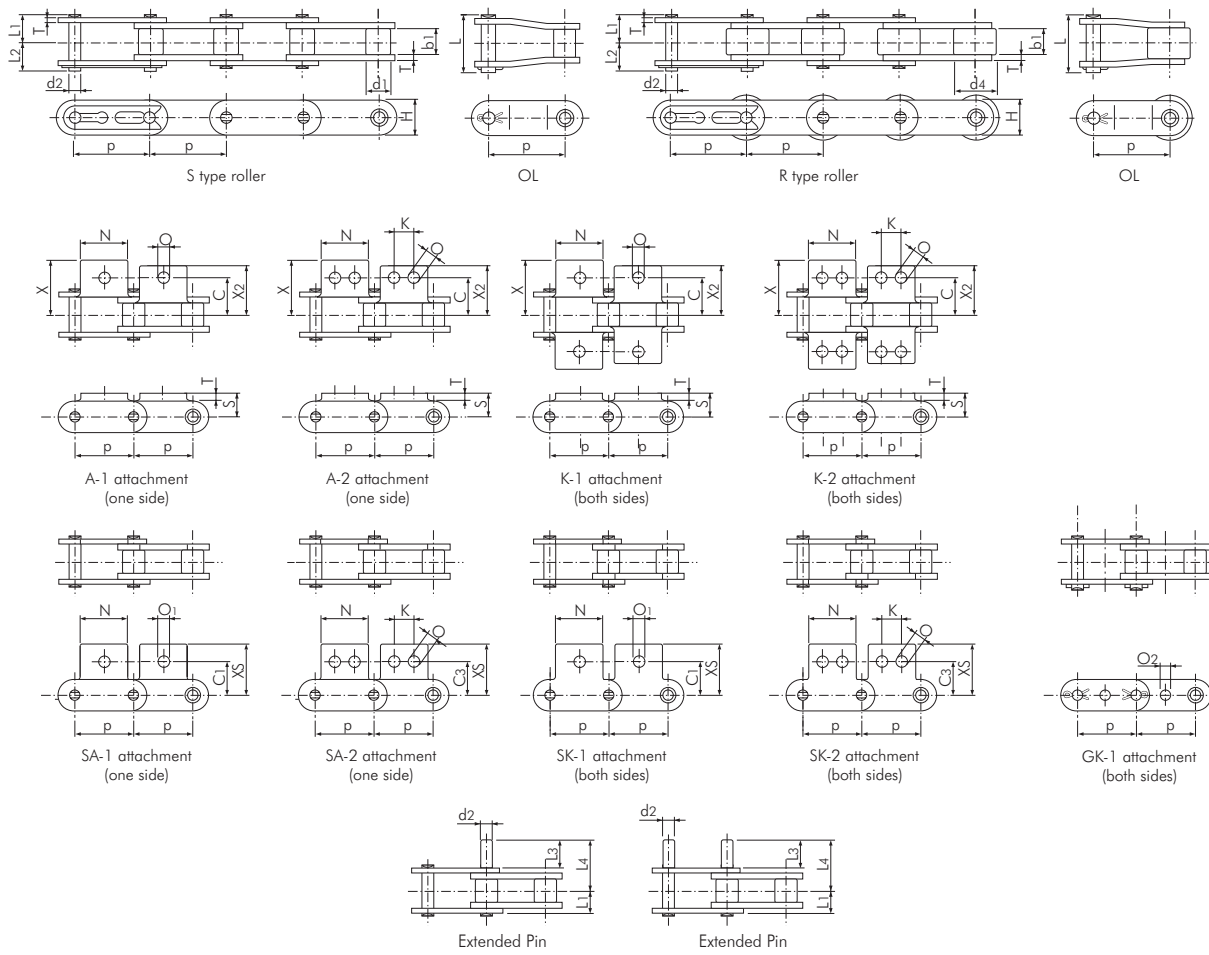

ANSI Double Pitch SS Chain

Dimensions in mm

TSUBAKI Chain No.	Pitch p		Inner Width b1	Roller S Roller d1	Roller R Roller d4	Pin Diameter d2	Pin Length L1	Pin Length L2	Pin Length L3	Pin Length L4	Pin Length L	Link Plate Thickness T	Link Plate Height H	Max. Allowable Load acc. to Tsubaki kN	Approx. Mass S Roller kg/m	Approx. Mass R Roller kg/m
RF2040-SS	25.40	(1″)	7.95	7.92	15.88	3.97	8.25	9.95	9.50	16.75	18.60	1.50	12.00	0.44	0.51	0.87
RF2050-SS	31.75	(1 1/4″)	9.53	10.16	19.05	5.09	10.30	12.00	11.90	21.00	23.90	2.00	15.00	0.69	0.84	1.30
RF2060-SS	38.10	(1 1/2″)	12.70	11.91	22.23	5.96	14.55	16.55	14.30	27.45	32.80	3.20	17.20	1.03	1.51	2.19
RF2080-SS	50.80	(2″)	15.88	15.88	28.58	7.94	18.30	20.90	19.10	35.50	42.10	4.00	23.00	1.76	2.41	3.52

TSUBAKI Chain No.	Attachment Dimensions C	C1	C3	K	N	O	O1	O2	S	X	X2	XS	Attachment Mass A SA kg/att.	K SK kg/att.	Ext. Pin kg/att.
RF2040-SS	12.70	11.10	13.60	9.50	19.10	3.60	5.20	4.10	9.10	19.30	17.60	19.80	0.003	0.006	0.001
RF2050-SS	15.90	14.30	15.90	11.90	23.80	5.20	6.80	5.10	11.10	24.20	22.00	24.60	0.006	0.012	0.002
RF2060-SS	21.45	17.50	19.10	14.30	28.60	5.20	8.70	6.10	14.70	31.50	28.20	30.60	0.017	0.034	0.003
RF2080-SS	27.80	22.20	25.40	19.10	38.10	6.80	10.30	8.10	19.10	40.70	36.60	40.50	0.032	0.064	0.007

Note:

1. Connecting links are clip type for sizes up to RF2060-SS, and cotter type for RF2080-SS, all GK-1 attachments are cotter type.
2. R-Roller is not available with GK-1 attachment.
3. Special attachments are available on request.
4. Chain with S type roller is indicated as RF2040S-SS.
5. Chain with R type roller is indicated as RF2040R-SS.

ANSI ATTACHMENT CHAIN FOR CORROSIVE ENVIRONMENTS

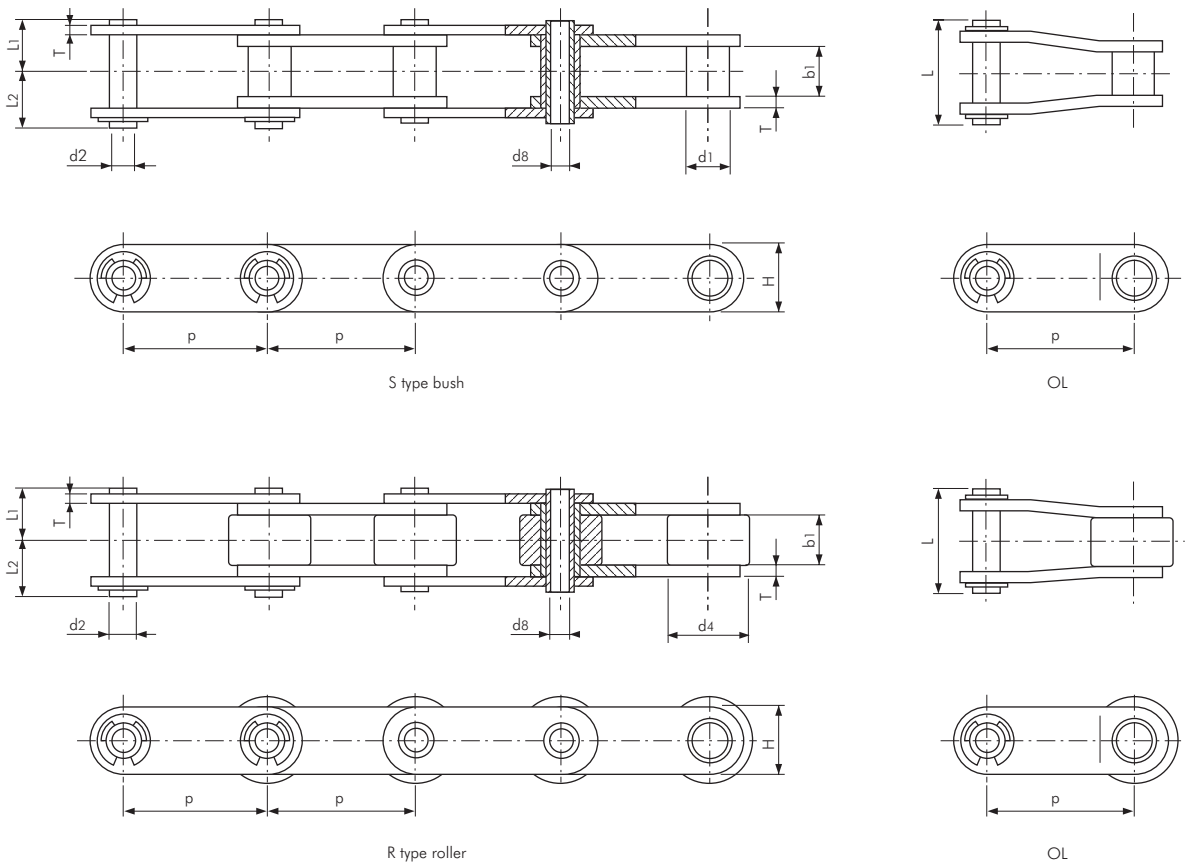

ANSI Double Pitch SS Hollow Pin (HP) Chain

Dimensions in mm

TSUBAKI Chain No.	Pitch p		Inner Width b1	S Bush d1	R Roller d4	Pin					Link Plate		Approx. Mass	
						Diameter d2	Hollow Pin d8	Length L1	Length L2	Length L	Thickness T	Height H	S Bush kg/m	R Roller kg/m
RF2040-HP-SS	25.40	(1″)	7.95	7.92	15.88	5.68	4.00	8.00	9.50	19.10	1.50	12.00	0.46	0.82
RF2050-HP-SS	31.75	(1 1/4″)	9.53	10.16	19.05	7.22	5.12	10.05	11.65	23.40	2.00	15.00	0.75	1.21
RF2060-HP-SS	38.10	(1 1/2″)	12.70	11.91	22.23	8.38	5.99	12.55	14.25	28.70	2.40	17.20	1.38	2.06
RF2080-HP-SS	50.80	(2″)	15.88	15.88	28.58	11.38	8.02	16.25	17.80	35.70	3.20	23.00	1.80	2.81

Note:

1. Chain with S type bush is indicated as RF2040S-HP-SS.
2. Chain with R type roller is indicated as RF2040R-HP-SS.



Cutting Machine Workshop Dordrecht

STOCK SPECIALTY ATTACHMENT CHAIN

Can Processing Industry



Fig. 27 RS60-2 AS Special

Packaging Industry

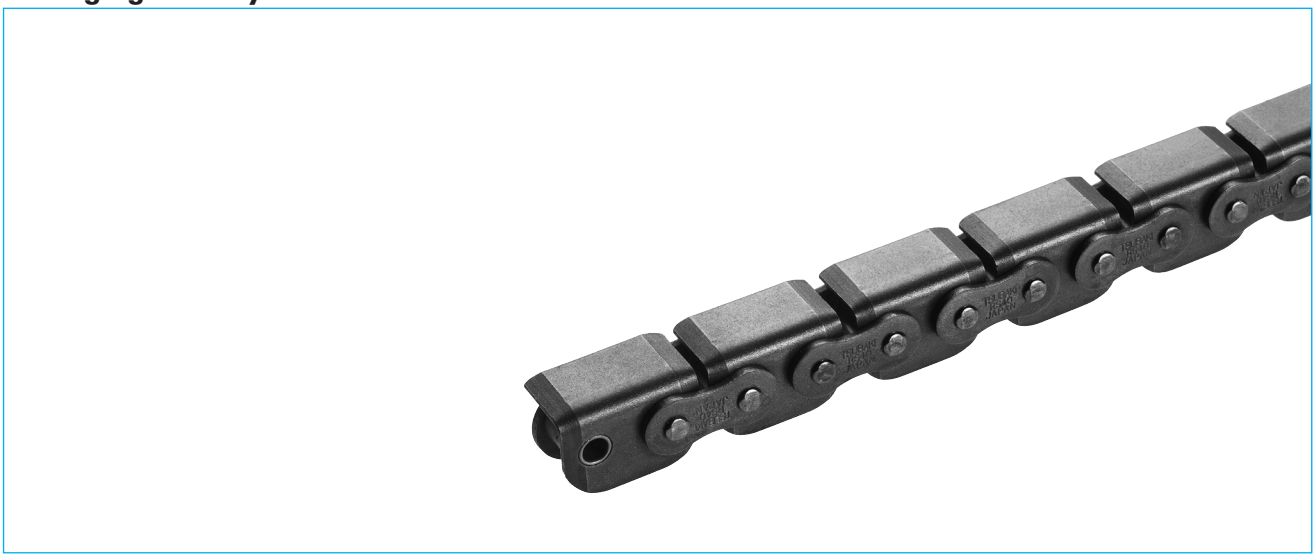

Fig. 28 RS35 and RS40 Special WA

Book Binding Industry



Fig. 29 RS12B Special Extended Pin

Packaging Industry

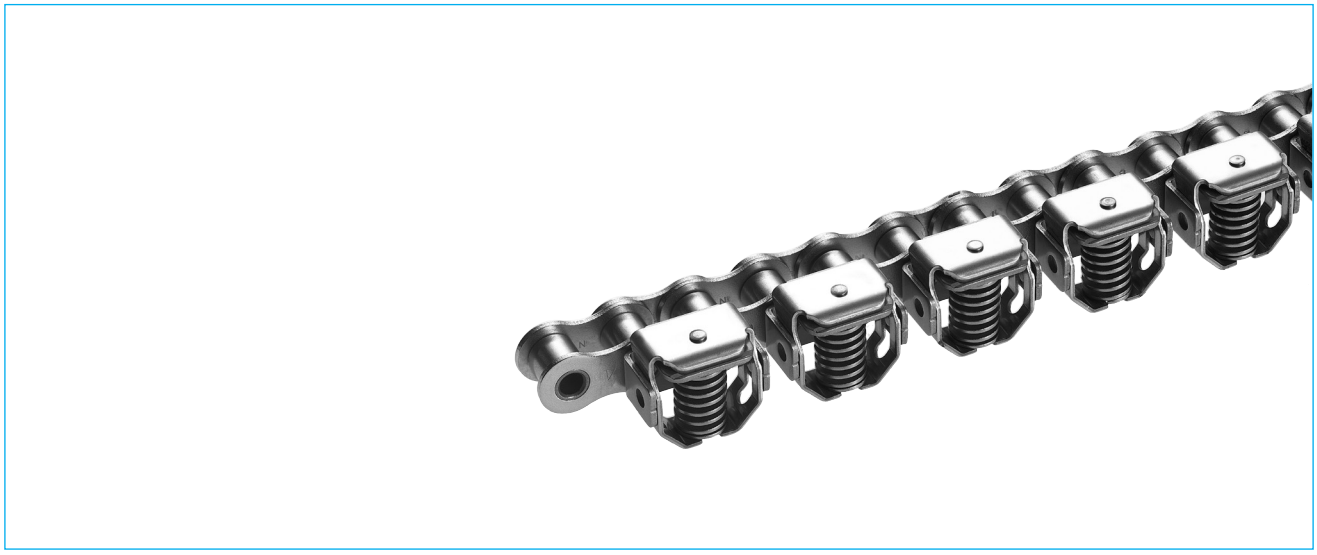

Fig. 30 RS08B and RS10B Gripper Chain

Packaging Industry



Fig. 31 RS50 and RF2050 Special Extended Pin

Automotive and Electronics Industry



Fig. 32 RF2030 VRP to RF2080 VRP Double Plus Chain

SPECIALTY ATTACHMENT CHAIN

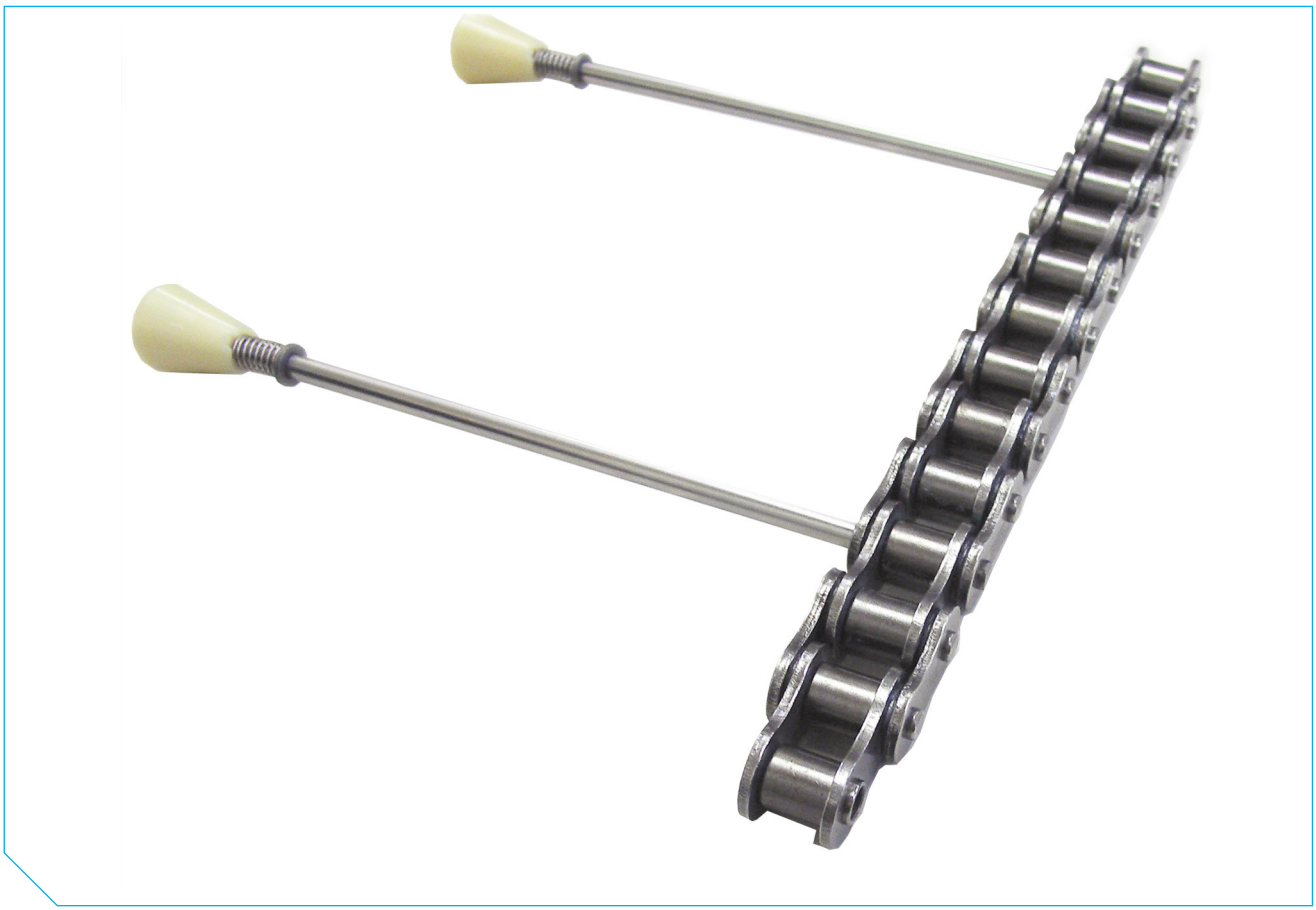

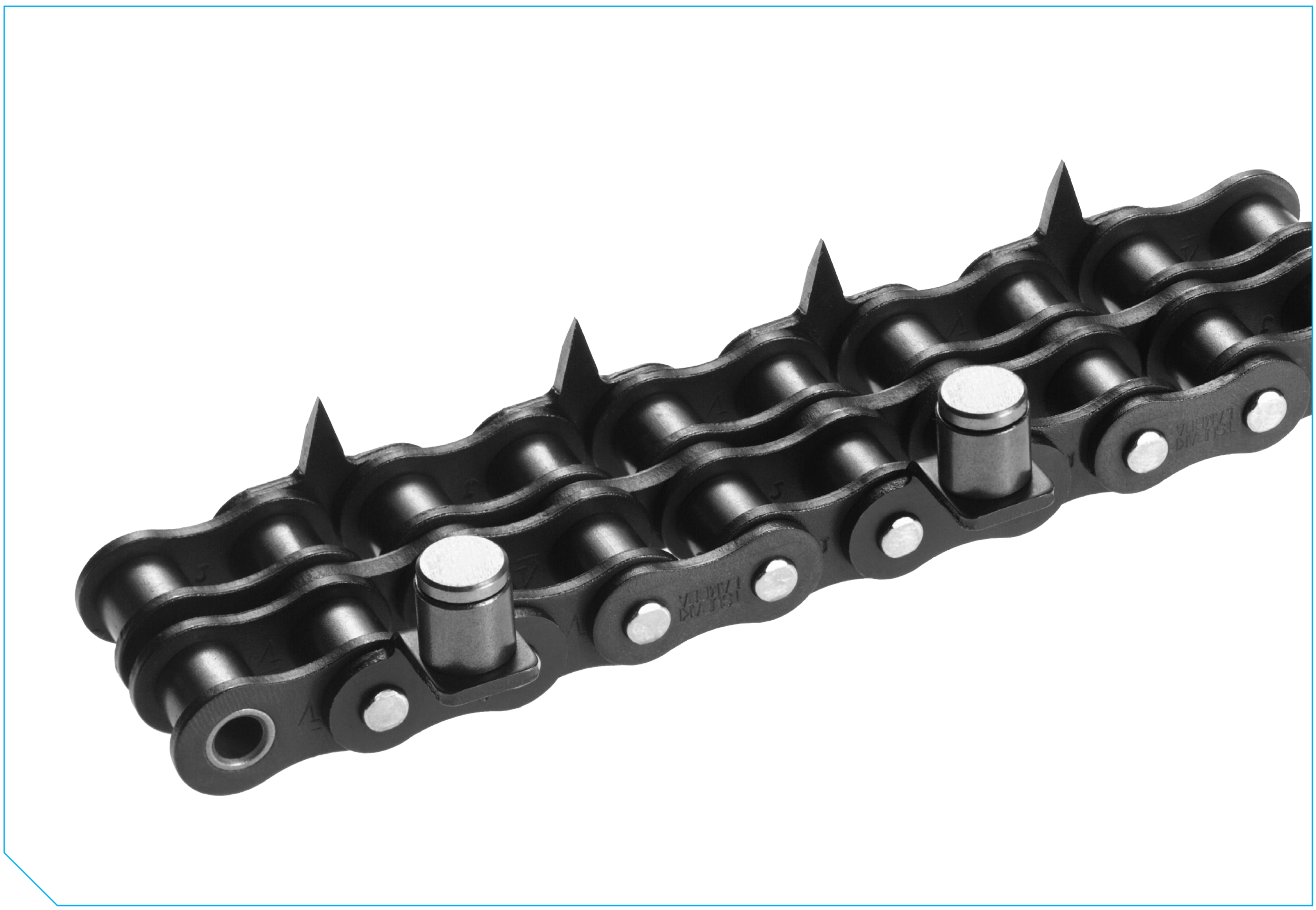

TEMPERATURE SELECTION METHOD

This selection method is for chains that may experience strength degradation from temperature. Additionally, lubrication should be carried out using a suitable lubricant according to the operating temperatures.

High Temperature

When chains are used in high temperatures, the following problems may occur:

- Increased wear due to decreased hardness.
- Poor articulation and increased wear due to lubricant deterioration and carbonization.
- Stiff joints and increased wear due to oxide scale formation.
- Increased elongation due to softening.
- Decreased strength.

To prevent lubricant deterioration at high temperatures, use a special lubricant.

When chains are used in temperatures above +250°C, pay special attention to the composition and heat-treatment of the chain. The most popular type of chain for high temperature is SS specification, which is made of 304 stainless steel and has a maximum working temperature of +650°C at low speeds. However, to maintain an adequate safety margin at a high temperature like this, we suggest NS specification chain. NS chain is made of 316 stainless steel, which contains molybdenum and less carbon. NS specification has worked at low speed in environments up to +700°C.

If your operation runs at temperatures higher than +400°C, consult Tsubaki before making your chain selection. Production methods and materials may be specially adapted for your application.

Low Temperature

When chains are used in low temperatures, the following problems may occur:

- Decreased shock strength due to low-temperature brittleness.
- Lubricant solidification.
- Stiff joints caused by frost or ice adhesion.

Two types of chain are especially useful at lower temperatures. KT specification chain is specially heat-treated to withstand very cold environments. SS specification chain, which is made of 304 stainless steel, may also be used at low temperatures. Low-temperature brittleness does not occur in austenitic stainless steel. These chains cannot fix the problems of solidification of the lubricant or stiff joints caused by frost or ice. Use cold-temperature oil or grease and apply it to the inner clearances and the outside of the chain.

Standard engineered plastic chain can be run at temperatures between -20°C and +80°C. At higher temperatures, it may become soft and not keep its shape; at lower temperatures it may become brittle.

Temperature	Standard Roller Chain		KT Cold Resistant Chain*	SS, NS, AS Chain
	upto 1" pitch	1" pitch and over		
Below -60°C	-	-	unusable	-
-60°C to -50°C	-	-	MAL / 2	-
-50°C to -40°C	-	unusable	MAL / 1.5	-
-40°C to -30°C	unusable	MAL / 4	MAL	-
-30°C to -20°C	MAL / 4	MAL / 3	MAL	#
-20°C to -10°C	MAL / 3	MAL / 2	MAL	MAL
-10°C to +60°C	MAL	MAL	MAL	MAL
+60°C to +150°C	MAL	MAL	unusable	MAL
+150°C to +200°C	MAL / 1.3	MAL / 1.3	-	MAL
+200°C to +250°C	MAL / 2	MAL / 2	-	MAL
+250°C to +400°C	unusable	unusable	-	MAL
+400°C to +500°C	-	-	-	#
+500°C to +600°C	-	-	-	-
+600°C to +700°C	-	-	-	-
above +700°C	-	-	-	-

Notes:

* KT Cold Resistant Chain: Made to order.

The ambient temperature is different from the temperature of the roller chain itself.

MAL = Maximum Allowable Load. For details contact Tsubaki.

Please consult TSUBAKI for more detailed information.

CORROSION RESISTANCE GUIDE

☆☆	Highly corrosion resistant
☆	Partially corrosion resistant
×	Not corrosion resistant
-	Not tested

Substance	Concentration	Temp. °C	SS	AS	PC/P
Acetic Acid	10%	20	☆☆	☆☆	☆☆
Acetone		20	☆☆	☆☆	☆☆
Alcohol			☆☆	☆☆	☆☆
Aluminum Sulfate	Saturated	20	☆☆	×	-
Ammonia Water		20	☆☆	☆☆	☆☆
Ammonium Chloride	50%	Boiling point	☆	×	-
Ammonium Nitrate	Saturated	Boiling point	☆☆	☆☆	☆
Ammonium Sulfate	Saturated	20	☆☆	☆	-
Beer		20	☆☆	☆☆	☆☆
Benzene		20	☆☆	☆☆	☆☆
Boric Acid	50%	100	☆☆	☆☆	-
Butyric Acid		20	☆☆	☆☆	☆☆
Calcium Chloride	Saturated	20	☆	×	☆
Calcium Hydroxide	20%	Boiling point	☆☆	☆☆	☆☆
Calcium Hypochlorite	11-14%	20	☆☆	×	×
Carbonated water			☆☆	☆☆	-
Carbon Tetrachlorite (dry)		20	☆☆	☆☆	☆☆
Chlorinated Water			×	×	×
Chlorine Gas (dry)		20	☆	×	-
Chlorine Gas (moist)		20	×	×	-
Chromic Acid	5%	20	☆☆	☆	×
Citric Acid	50%	20	☆☆	☆☆	-
Coffee		Boiling point	☆☆	☆☆	☆☆
Creosote		20	☆☆	☆☆	-
Developing Solution		20	☆☆	☆	☆☆
Ethyl Ether		20	☆☆	☆☆	☆☆
Ferric Chloride	5%	20	☆	×	-
Formalin	40%	20	☆☆	☆☆	-
Formic Acid	50%	20	☆☆	☆☆	×
Fruit Juice		20	☆☆	☆	☆☆
Gasoline		20	☆☆	☆☆	☆☆
Glycerol		20	☆☆	☆☆	☆☆
Honey			☆☆	☆☆	☆☆
Hydrochloric Acid	2%	20	×	×	×
Hydrogen Peroxide	30%	20	☆☆	☆	×
Hydrogen Sulfide (dry)			☆☆	☆☆	☆☆
Hydrogen Sulfide (moist)			×	×	×
Hydroxybenzene		20	☆☆	☆☆	×
Kerosene		20	☆☆	☆☆	-
Ketchup		20	☆☆	☆☆	☆☆
Lactic Acid	10%	20	☆☆	☆	☆☆
Lard			☆☆	☆☆	-
Linseed Oil	100%	20	☆☆	☆	☆☆
Malic Acid	50%	50	☆☆	☆☆	☆☆
Mayonnaise		20	☆☆	☆	☆☆
Milk		20	☆☆	☆☆	☆☆

Key: SS: 304 SS Series PC: Poly-Steel Chain
AS: 600 AS Series P: Plastic Chain

CORROSION RESISTANCE GUIDE

Substance	Concentration	Temp. °C	SS	AS	PC/P
Nitric Acid	5%	20	☆☆	☆	×
Nitric Acid	65%	20	☆☆	×	×
Nitric Acid	65%	Boiling point	☆	×	×
Oil (Plant, Mineral)		20	☆☆	☆☆	☆☆
Oleic Acid		20	☆☆	☆☆	☆☆
Oxalic Acid	10%	20	☆☆	☆	-
Paraffin		20	☆☆	☆☆	☆☆
Petroleum		20	☆☆	☆☆	☆☆
Phosphoric Acid	5%	20	☆☆	☆	×
Phosphoric Acid	10%	20	☆	☆	×
Picric Acid	Saturated	20	☆☆	☆☆	-
Potassium Bichromate	10%	20	☆☆	☆☆	☆☆
Potassium Chloride	Saturated	20	☆☆	☆	-
Potassium Hydroxide	20%	20	☆☆	☆☆	☆☆
Potassium Nitrate	25%	20	☆☆	☆☆	☆☆
Potassium Nitrate	25%	Boiling point	☆☆	×	-
Potassium Permanganate	Saturated	20	☆☆	☆☆	-
Sea-Water		20	☆	×	☆
Soap-and-Water-Solution		20	☆☆	☆☆	☆☆
Sodium Carbonate	Saturated	Boiling point	☆☆	☆☆	-
Sodium Chloride	5%	20	☆☆	☆	☆☆
Sodium Cyanide		20	☆☆	-	-
Sodium Hydrocarbonate		20	☆☆	☆☆	☆☆
Sodium Hydroxide	25%	20	☆☆	☆☆	☆☆
Sodium Hypochlorite	10%	20	×	×	×
Sodium Perchlorate	10%	Boiling point	☆☆	×	-
Sodium Sulfate	Saturated	20	☆☆	☆☆	-
Sodium Thiosulfate	25%	Boiling point	☆☆	☆☆	-
Soft Drink		20	☆☆	☆☆	☆☆
Stearic Acid	100%	Boiling point	×	×	×
Sugar Solution		20	☆☆	☆☆	☆☆
Sulfuric Acid	5%	20	×	×	×
Sulfur Dioxide (moist)		20	☆☆	×	-
Synthetic Detergent			☆☆	☆☆	☆☆
Syrup			☆☆	☆☆	☆☆
Tartaric Acid	10%	20	☆☆	☆☆	☆☆
Turpentine		35	☆☆	☆☆	-
Varnish			☆☆	☆☆	-
Vegetable Juice		20	☆☆	☆☆	☆☆
Vinegar		20	☆☆	☆☆	☆☆
Water			☆☆	☆☆	☆☆
Whiskey		20	☆☆	☆☆	☆☆
Wine		20	☆☆	☆☆	☆☆
Zinc Chloride	50%	20	☆	×	☆
Zinc Sulfate	Saturated	20	☆☆	☆☆	-
Wine		20	☆☆	☆☆	☆☆
Zinc Chloride	50%	20	-	☆	☆
Zinc Sulfate	25%	20	☆☆	☆☆	×

This table is intended only as a guide and TSUBAKI does not take responsibility for mishaps arising from its use.

TSUBAKI ATTACHMENT CHAIN APPLICATION CHECK SHEET

Date:			
Company name:	Tel:		
Contact person:	Fax:		
1) Type of requirement	❑ New design	❑ Replacement	❑ Investigation
	If replacement -	Motor size	(kW)
		Sprocket size	(Teeth)
2) Type of conveyor	❑ Slat conveyor	❑ Bucket conveyor	
	❑ Pusher	❑ Other	
3) Mass & quantity of slats, pushers etc.:		(kg/pc)	(pc)
4) Conveying direction:	❑ Horizontal	❑ Vertical	
	Inclined - Specify Gradient		
5) Description of conveyed goods:			
6) Length of conveying portion:			(m)
7) Mass of conveyed goods in conveying portion:			(kg/pc)
8) Maximum quantity of conveyed goods: in conveying portion:			(pc)
9) Length of accumulated portion (if where):			(m)
10) Mass of conveyed goods in accumulated portion:			(kg/pc)
11) Maximum quantity of conveyed goods in accumulated portion:			(pc)
12) Size of conveyed goods	Length		(mm)
	Width		(mm)
	Height		(mm)
13) Conveying speed:			(m/min.)
14) For indexing applications	Mass (or size) of driven sprocket		kg (teeth)
	Acceleration and deceleration		(m/sec^2)
	Feed per index		(m)
	Time to complete index		(second)
	Cam curve	❑ Modified sin curve (MS)	
		❑ Modified trapezoidal curve (MT)	
		❑ Modified sin mean curve (MSC)	
15) Desired chain pitch:			(mm)
16) Desired attachment type and spacing:			
17) Number of chain strands:			(strand)
18) Lubrication condition	❑ With lubrication	❑ Without lubrication	
19) Operation time:	hours per day	days per week	weeks per year
20) Temperature:			(°C)
21) Environmental conditions (corrosive, humid etc.):			

Please complete and return to Tsubakimoto Europe B.V. on fax: +31-(0)78 6204001

TSUBAKI ATTACHMENT CHAIN LAYOUT SHEET

Tsubakimoto Europe B.V. Aventurijn 1200 3316 LB Dordrecht The Netherlands FAX: +31 (0)78-6204001 E-MAIL: info@tsubaki.eu	Customer Name: Contact: Chain type: Chain length: Total no. of attachments:

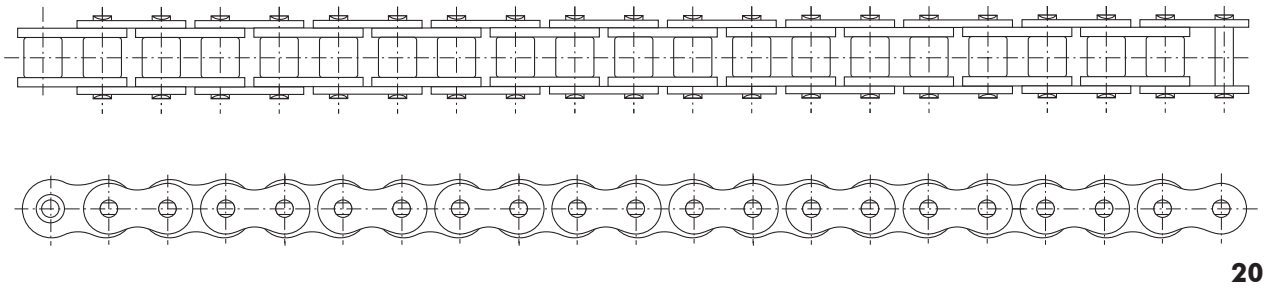

20

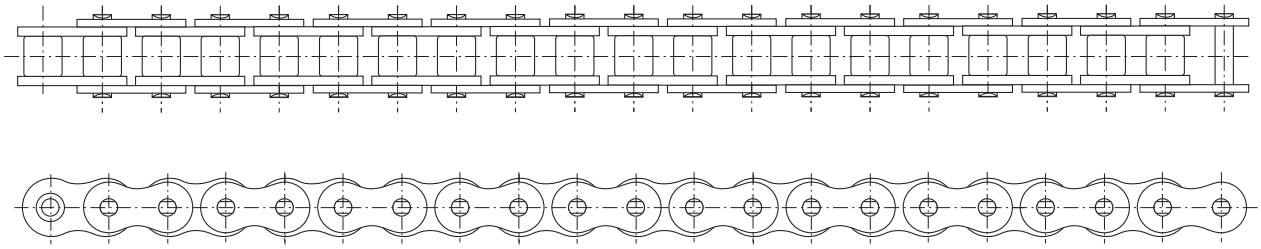

40

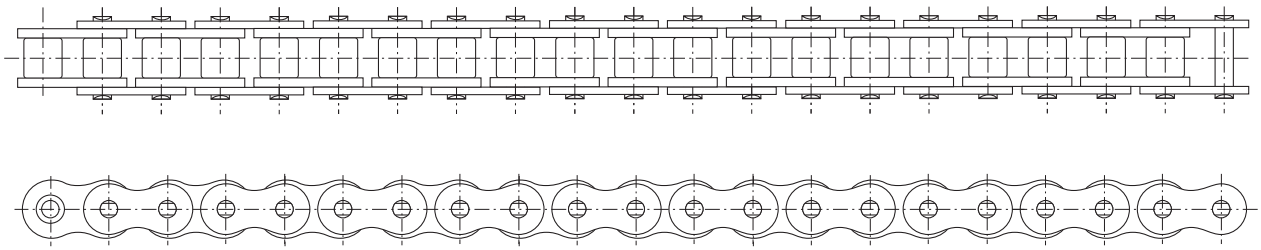

60

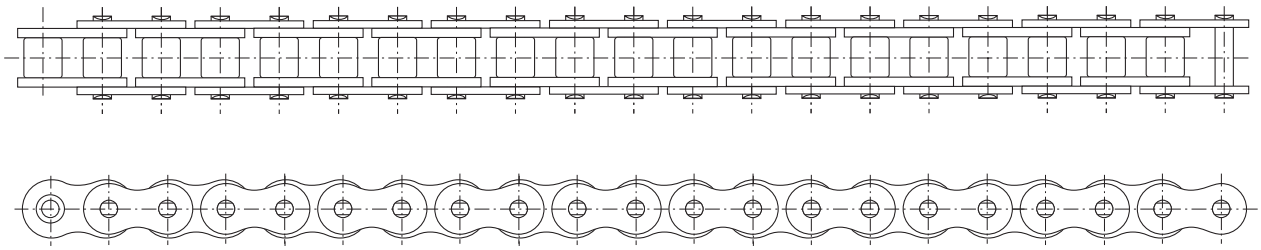

80

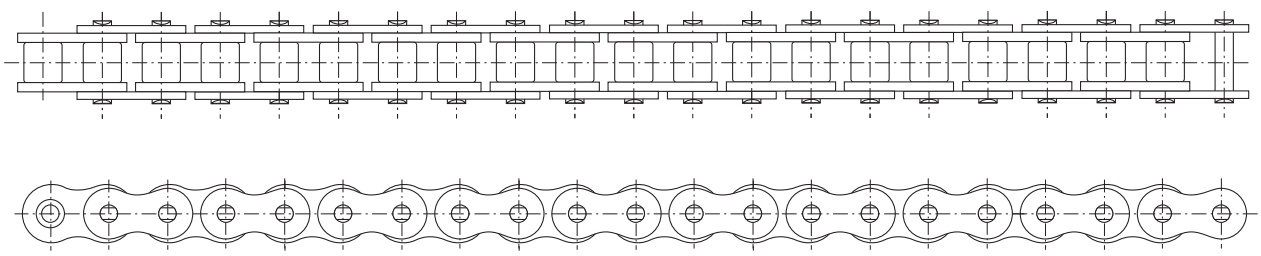

100

EASY SPACING GUIDE FOR ATTACHMENT CHAINS

GENERAL TERMS AND CONDITIONS OF SALE TSUBAKIMOTO EUROPE B.V.

1. General

In these general terms and conditions 'Tsubaki' shall mean Tsubakimoto Europe B.V.

2. Applicability

2.1 The applicability of the general terms and conditions used by the customer is hereby expressly excluded.

2.2 These general terms and conditions are applicable to all legal relationships in which Tsubaki acts as a seller and/or supplier or as a potential seller and/or supplier of products and/or services.

2.3 Deviations from the provisions in these general terms and conditions shall be permitted only in writing. No rights in relation to agreements that are concluded later may be derived from such deviations.

3. Conclusion of the agreement / Measurements & Weight

3.1 If the customer issues an order, the agreement shall have been concluded if Tsubaki accepts the order in writing or electronically or makes a start with its implementation.

3.2 Drawings, measurements and weights that are shown or provided on the website of Tsubaki or otherwise, shall only be used as indications. The product and/or service to be provided under the agreement need not correspond with the drawing, measurement and weight.

4. Prices / Delivery conditions

4.1 Prices are exclusive of VAT.

4.2 Prices are ex warehouse, unless otherwise agreed in writing.

4.3 Prices are as per Tsubaki described standard unit or packaging only.

4.4 In addition to the price, the customer shall fully pay, unless otherwise agreed in writing, any and all, local taxes, duties, excises, licence fees and other charges levied, assessed or imposed upon Tsubaki due to the manufacture, sale, purchase, export or delivery of the products.

4.5 The customer shall also pay the cost by which such manufacture is increased by reason of any law, ordinance or regulation adopted or promulgated by any government or governmental subdivision, department or agency, or other source, after the date hereof, but prior to the completion and delivery hereunder.

4.6 Changes in labour costs, cost prices of raw materials or materials and/or exchange rate movements related to the performance agreed on, shall entitle Tsubaki to pass on these costs to the customer.

5. Delivery/delivery times

5.1 The delivery period indicated by Tsubaki starts as from the moment that all data, drawings and the like necessary for the performance of the agreement have been received by Tsubaki in its entirety.

5.2 Delivery times agreed with Tsubaki are indicative and shall not constitute deadlines.

5.3 Failure to deliver within the indicated delivery period does not entitle the customer to additional or substitute damages, nor to the customer's non-fulfilment, withholding or postponement of any of its own obligations arising from the agreement.

5.4 If the customer requests Tsubaki to make changes in the performance of the agreement (including, but not limited to, changes in the design or construction of products), or otherwise delay or interrupt the progress of the work under the agreement, the customer shall fully reimburse Tsubaki for any and all additional expenses arising there from.

5.5 Tsubaki shall be entitled to perform its due obligation(s) in stages or in parts. Each partial delivery shall be deemed an independent delivery with respect to the applicability of these general terms and conditions.

6. Returned products

6.1 No products shall be acceptable for return without prior written consent of Tsubaki.

6.2 Special or made-to-order products are not returnable.

6.3 The customer shall prepay freight on all returns, and each return is subject to inspection and acceptance by Tsubaki to assure that the products are in a "re-sellable" condition.

6.4 The customer shall pay a maximum of 10% (ten percent) of the price for handling and restocking costs charge with regard to all authorized returns.

7. Payment

7.1 Payment of Tsubaki's invoices shall ultimately take place within 30 (thirty) days after the invoice date in the manner described by Tsubaki, provided however that Tsubaki may at all times request for payment in advance. Payment shall take place effectively in the currency agreed on and without deduction, set-of, discount and/or deferment.

7.2 In case of overdue payment, all payment obligations of the customer, regardless of whether Tsubaki has already issued an invoice in the matter and of whether Tsubaki has duly performed its obligations, shall be immediately due and payable and the customer shall owe an interest of 1.5% (one and a half percent) per month or per part of a month on the amount due.

7.3 Extra-judicial collection costs shall be charged to the customer in accordance with the collection rates of the Netherlands Bar Association.

7.4 Payment by or on behalf of the customer shall extend to payment of the following charges incurred, in the following order: extra-judicial collection costs, the legal costs, the interest due, and after that the unpaid capital sums according to the order of receipt, regardless of other instructions of the customer.

7.5 The customer can only object to the invoice within the term of payment.

8. Intellectual Property Rights and know-how

8.1 All documentation, sales leaflets, pictures, drawings etc., provided by Tsubaki to the customer, shall at all times remain the exclusive property of Tsubaki.

8.2 The customer shall not be entitled to use the documents referred to in paragraph 1 for any purpose other than for the use of the products to which they relate.

8.3 The customer shall not be entitled to use the documents referred to in paragraph 1 or to duplicate and/or make public to third parties data included therein or in any other way made known to the customer without express prior written consent of Tsubaki.

8.4 In the event of any violation of what has been stipulated under paragraph 2 and/or 3, the customer shall pay Tsubaki an immediately payable fine of EUR 10,000 (ten thousand euros) for each violation, regardless of any other of Tsubaki's rights to performance, dissolution, compensation, etc.

9. Retention of title

9.1 All products that are delivered or are to be delivered by Tsubaki remain the property of Tsubaki until Tsubaki is fully paid with regard to:

A. all performances due by the customer for all products that are delivered or are to be delivered in accordance with the agreement, and;

B. all claims that are the result of the customer's failing in the performance of such agreement(s); the customer shall not be allowed to claim its right of retention concerning costs of custody and to deduct these costs with the performances required by the customer.

9.2 If the customer creates a new product from or partly from products referred to in paragraph 1, this product belongs to Tsubaki and the customer shall consider Tsubaki its owner, until the customer has fully performed all of its obligations referred to in paragraph 1.

9.3 If any product belongs to Tsubaki in accordance with paragraph 1 and/or 2, the customer can have exclusive possession of this product or product within the framework of its normal business operations.

9.4 If the customer is in default in the performance of its obligations referred to in paragraph 1, Tsubaki shall be entitled to recover all the products from their location, at the expense of the customer. The customer hereby irrevocably grants authority to Tsubaki to enter the area used by or for the customer.

10. Security

10.1 If there are valid grounds to expect that the customer shall not perform its obligations, the customer shall be obliged, at the first request of Tsubaki, to immediately furnish adequate security in the form requested by Tsubaki (including complete payment in cash before or on delivery) without prejudice to customer's obligations under the agreement. If and to the extent that the customer has not fully performed its obligations, Tsubaki shall be entitled to suspend performance of its obligations.

10.2 If the customer takes no action on the request referred to in paragraph 1 within 14 (fourteen) days after having received a written warning to that effect, all its obligations shall be immediately due and payable.

11. Guarantee

11.1 With regard to the assembly carried out by Tsubaki, the following guarantee is provided: For 6 (six) months, Tsubaki shall repair faults in the assembly, free of charge, at the discretion of Tsubaki.

11.2 If and to the extent Tsubaki can claim guarantee with respect to its own suppliers, Tsubaki shall provide the following guarantee on products obtained from them: For 6 (six) months, Tsubaki shall supply alternative products, free of charge, if the products supplied exhibit manufacturing defects or defects in the material, at the discretion of Tsubaki.

11.3 The customer can only make a non-recurring claim under the guarantee mentioned in paragraphs 1 and 2 if the customer has performed all its obligations towards Tsubaki.

11.4 Defects which are the result of normal wear, improper use or improper or incorrect maintenance or which occur after changes or repair carried out by or on behalf of the customer, shall not be part of the guarantee.

11.5 Minor differences, which means 10% (ten percent) or less with regard to amounts, measures, weights, numbers and other such data provided, are not considered defects.

12. Complaints / obligation to examine / limitation period

12.1 On delivery, the customer has the obligation to examine whether the products are in conformity with the agreement. If this is not the case, the customer cannot make a claim regarding non-conformity if the customer does not notify Tsubaki in writing in a well-founded manner as soon as possible, but in any event within 8 (eight) days after delivery or after detection of non-conformity was reasonably possible.

12.2 Any and all of the customer's claims and defences based on facts that support the view that the product delivered is not in conformity with the agreement, shall expire 6 (six) months after delivery.

13. Dissolution and release

13.1 If the customer does not perform or incorrectly performs any of its obligations arising from the agreement (such as overdue payment), if the customer is placed under guardianship, involuntary liquidation, suspension of payment or closure or winding up of its company, and also in the case of prejudgment or executory attachment against the customer or if an offer or agreement with regard to an extra-judicial debt settlement with the customer has been made, Tsubaki shall be entitled, at its option, without any obligation for compensation and without prejudice to its other rights, to dissolve the agreement in whole or in part, or to suspend the further execution of the agreement. In these cases, Tsubaki shall be also entitled to claim immediate compensation of the amount due.

13.2 If the proper performance by Tsubaki is partially or completely impossible, whether temporarily or permanently, due to one or more circumstances which cannot be held accountable to Tsubaki, including the circumstances mentioned in the paragraph 14.6, Tsubaki, at its option, shall be entitled to suspend its performance or to dissolve the agreement.

13.3 If the customer is not willing to cooperate with the delivery after Tsubaki has given the customer 14 (fourteen) days to do so, Tsubaki will be released from its obligations, without prejudice to the obligations of the customer.

14. Compensation

14.1 Tsubaki shall only be liable for damages suffered by the customer which can be attributed to gross negligence or intention by Tsubaki to the amount that Tsubaki is insured in accordance with an insurance commonly used in this line of industry and which is actually paid out with respect thereto. The aggregate compensation payable by Tsubaki shall not exceed EUR 500.000 (five hundred thousand euros) per event, whereby a series of related events shall be considered as one event.

GENERAL TERMS AND CONDITIONS OF SALE TSUBAKIMOTO EUROPE B.V.

14.2 Tsubaki shall never be liable to pay any compensation other than personal injury or property damage.

14.3 Tsubaki shall never be liable for loss of income, profit or revenue, loss due to shutdown or delay in business activities, production losses, loss of operating hours and/or wages paid in vain, extra costs incurred due to external purchasing, loss due to restoration of lost information, missed savings or agreements, discounts or penalties.

14.4 Tsubaki stipulates all legal and contractual defences, which it can invoke to fend off its own liability towards the customer, also on behalf of its employees and non-employees for whose acts it is liable in accordance with the law.

14.5 Tsubaki shall not be liable with regard to products supplied by Tsubaki which originate from third parties if and to the extent that the applicable third party has excluded its liability.

14.6 Under no circumstance shall Tsubaki be held liable for the following circumstances: actions, except gross negligence or intention, of persons used by Tsubaki for the realisation of the agreement; unsuitability of products which Tsubaki uses for the realisation of the agreement; exercising one or more rights by a third party vis-à-vis the customer in the case of a failure in the performance by the customer of an agreement between the customer and the third party concerning products supplied by Tsubaki; industrial action, lockout of workers, illness, bans on import, export and/or transport, problems with transport, failure to comply with the obligations by suppliers, production failure, natural and/or nuclear disasters, and war and/or threat of war.

14.7 The customer shall indemnify Tsubaki against all claims from any third party, in whatever form, with regard to damage and/or loss, which any third party may have suffered due to products of Tsubaki.

14.8 Everything stipulated in this article shall be without prejudice to Tsubaki's liability pursuant to mandatory provisions of law.

15. Amendment of general terms and conditions

15.1 Tsubaki has the right to amend these general terms and conditions from time to time. Amendments apply also with regard to agreements already concluded. Amendments shall be notified in advance in writing or electronically to the customer and shall enter into effect 30 (thirty) days after this notification or on such date as specified in the notification.

15.2 In the event the customer fails, with respect to the amended general terms and conditions, to give written notice that it does not accept these amended general terms and conditions prior to the day on which the aforementioned terms enter into effect, such as is indicated here above, the customer shall be deemed to have accepted these amended general terms and conditions.

16. Conversion

If and to the extent that any provision in these general terms and conditions cannot be invoked on grounds of reasonableness and fairness or its unreasonably onerous nature, the provision shall be given a meaning that corresponds as much as possible to its content and purpose, making it thereby possible to invoke this provision.

17. Assignment

17.1 Tsubaki is entitled to assign one or more of its obligations or its entire legal relationship with the customer to a third party without consent of the customer. Tsubaki shall inform the customer of this transfer in writing.

17.2 The customer is only entitled to assign one or more of its obligations or its entire legal relationship with Tsubaki to a third party upon Tsubaki's express prior written consent.

18. Applicable law / competent court

18.1 All legal relationships between Tsubaki and the customer shall be governed by the laws of the Netherlands, without taking into account the principles of conflict of laws.

18.2 The applicability of the United Nations Convention on Contracts for the International Sale of Goods is expressly excluded.

18.3 All disputes which may arise between Tsubaki and the customer that fall under the jurisdiction of a district court, shall only be submitted to the court in the judicial district in which Tsubaki has its registered office, unless Tsubaki as a plaintiff or an applicant opts for the competent court in which the customer has its registered office or address for service.

19. Dutch text prevails

If and insofar as there is a discrepancy between the general terms and conditions in the Dutch language and those in the English language, those in the Dutch language shall prevail.

These conditions were filed at the Chamber of Commerce and Industry in Rotterdam.

For Safe Use

WARNING Obey the following points in order to prevent hazardous situations.

- Do not use chains and accessories (accessories and parts) for anything other than their orginal purpose.
- Never perform additional processing on the chain:
  - Do not anneal the various parts of the chain.
  - Do not clean the chain with either acid or alkali, as they may cause cracking.
  - Do not electroplate the chain or its parts, as they may cause cracking due to hydrogen embrittlement.
  - Do not weld the chain, as the heat may cause cracking or a reduction in strength.
  - When heating or cutting the chain with a torch, remove the links immediately adjacent and do not use them again.
- When there is need to replace a lost or damaged portion of a chain, always replace the whole chain with a new product rather than replacing only the lost or damaged portion.
- When using a chain on suspension equipment, establish a safety manual, etc., and strictly prevent entry to the area directly below the suspended object.
- Always employ hazard protector devices for the chain and sprocket (safety cover, etc.).
- If a substance that can cause embrittlement cracking (acid, strong alkali, battery fluid, etc.) adheres to the chain, stop using the chain immediately and replace it with a new one.
- During installation, removal, maintenance inspection and lubrication of the chain:
  - Perform the operation according to the instruction manual or this catalog.
  - Always turn off the power switch to the device and make sure that it cannot be turned on accidentally.
  - Anchor the chain and parts so that they cannot move freely.
  - Perform cutting and connecting procedures properly using a press or other special tool.
  - Wear clothing and employ protective devices that are appropriate to the job (safety glasses, gloves, safety shoes, etc.).
  - Only allow experienced personnel to perform chain replacement procedures.
- In order to prevent hazards, damage, or injury when cutting a Leaf Chain, always install hazard protection devices (safety device, etc.) on the suspension equipment employing the Leaf Chain.

CAUTION Obey the following points in order to prevent accident.

- Only handle the chain after thoroughly understanding its structure and specifications.
- When installing a chain, inspect it in advance to confirm that is has not been damaged in transport.
- Be sure to perform regular maintenance inspections on the chain and sprocket.
- Chain strength varies according to manufacturer. When selecting a chain based on a Tsubaki catalog, always use the corresponding Tsubaki product.
- Minimum tensile strength refers to the failure point when the corresponding load is applied to the chain once and does not refer to the allowable operational load.

DISTRIBUTED BY:

TEU Cat2-15

NOTE: in accordance with the policy of Tsubakimoto Europe B.V. to consistently improve its products, the specifications in this catalogue are subject to change without notice.

Copyright © 2015 Tsubakimoto Europe B.V.
The contents of this catalogue must not be reproduced in any way unless written permission is obtained.
Every care has been taken to ensure the accuracy of the information in this catalogue but no responsibility or liability can be accepted for any loss or damage suffered as a result of information it contains.
The catalogue information is subject to change without notice so please do not hesitate to contact Tsubakimoto Europe if you need clarification or have any queries.

Innovation in Motion
TSUBAKI

Innovation in Motion

TSUBAKI

Tsubakimoto Europe B.V.

Aventurijn 1200
3316 LB Dordrecht
The Netherlands

Phone: +31 (0)78 620 4000
Fax: +31 (0)78 620 4001
E-mail: info@tsubaki.eu
Internet: tsubaki.eu

Tsubakimoto Deutschland GmbH

ASTO Park Oberpfaffenhofen
Friedrichshafener Straße 1
D-82205 Gilching, Germany

Phone: +49 (0)8105 7307 100
Fax: +49 (0)8105 7307 101
E-mail: antriebstechnik@tsubaki.de
Internet: tsubaki.de

Tsubakimoto UK Ltd.

Osier Drive, Sherwood Park
Annesley, Nottingham NG15 0DX
United Kingdom

Phone: +44 (0)1623 68 87 00
Fax: +44 (0)1623 68 87 89
E-mail: sales@tsubaki.co.uk
Internet: tsubaki.eu