Innovation in Motion
TSUBAKI

TSUBAKI Mechanical Overload Protectors

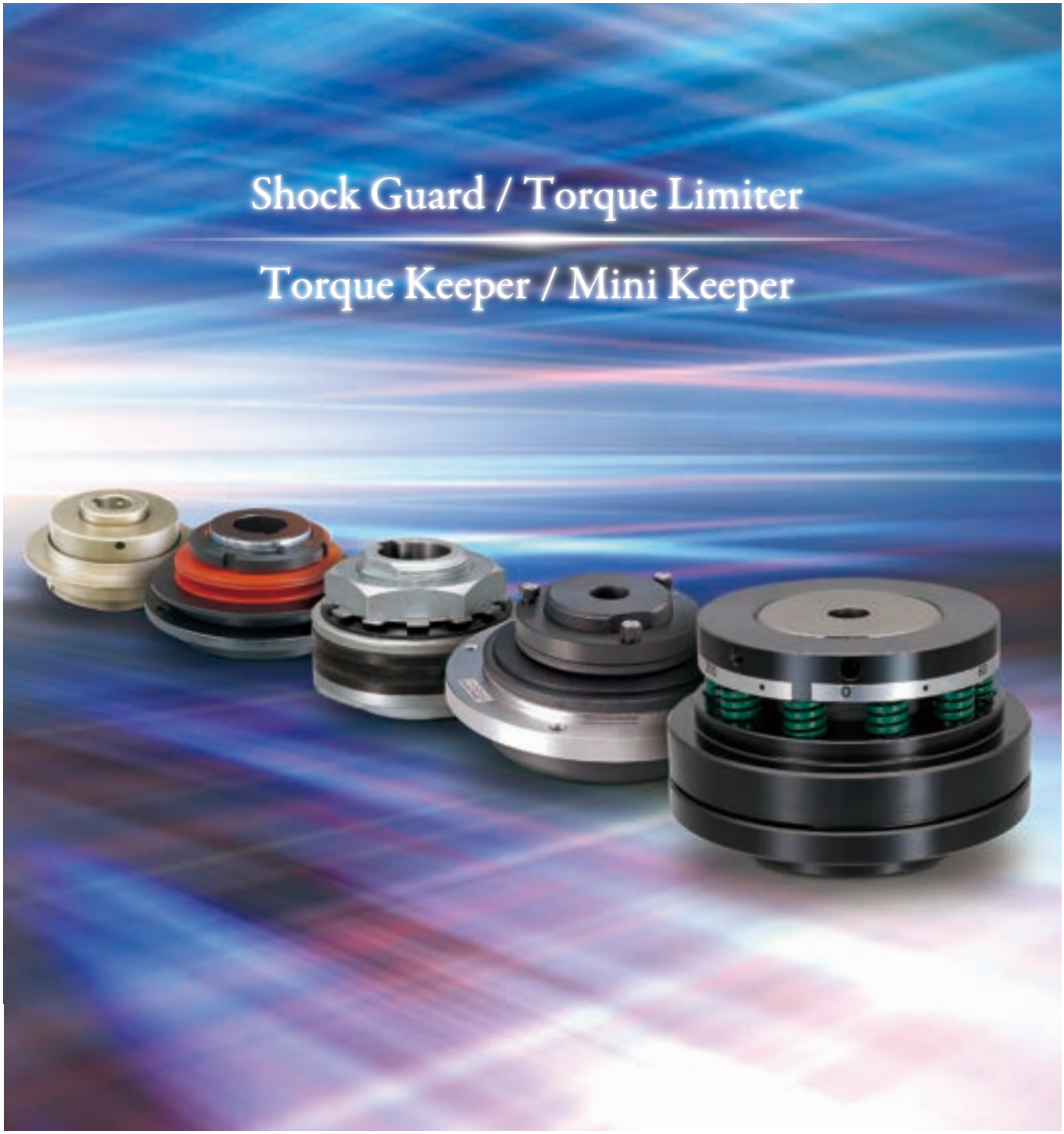

A wide-ranging lineup to meet any application

Shock Guard

Disengage type

TGF Series

Ideal for indexers; superb reset accuracy

TGB Series

Easy to use;
wide range of sizes

TGX Series

High rigidity with no backlash



SAFE &

Ensuring Safety

Uses fine chemical fibers for longer life

Torque Keeper

Mechanical slip clutch and brake type



TGM Series

Sealed structure; excels in wet, dusty, and oily applications

TGE Series

Wide torque range; accommodates small-diameter-sprocket and wide-pulley applications



TGK Series

Pneumatic mechanism allows remote torque adjustments during operation

GUARD
in Your Machine



Versatile and cost-effective

Torque Limiter

Friction type



Precise, lightweight, compact, and easy to use

Mini Keeper

Mechanical slip clutch and brake type

VARIATIONS

Overload protection

Disconnection (trip) method
- Separate type

Torque adjustment method
- Spring force

Reset method
- Automatic

Structure
- Unsealed
- Sealed

One-position reset
- Yes
- Yes

Backlash
- Small
- None
- Minimal
- None

Shock Guard
- Wide range of sizes
- Compact
- Compact
- Wide torque capability
- Long life

Shock Guard TGB Series	Shock Guard TGE Series	Shock Guard TGX Series	Shock Guard TGF Series	Shock Guard TGM Series
				
Torque range: 0.3 to 7150 N·m Max. rpm: 80 to 1200	Torque range: 1.0 to 700 N·m Max. rpm: 570 to 900	Torque range: 1.7 to 784 N·m Max. rpm: 480 to 1400	Torque range: 6.0 to 4900 N·m Max. rpm: 340 to 900	Torque range: 0.6 to 1060 N·m Max. rpm: 150 to 600

Friction type

Pneumatic | Spring force

Automatic/manual | Automatic

Unsealed | Unsealed

Yes | No

Minimal

On–off mechanism

Torque Limiter

Shock Guard TGK Series



Torque range: 15 to 392 N·m
Max. rpm: 230 to 430

Torque Limiter TL Series



Torque range: 1.0 to 9310 N·m
Max. rpm: 500 to 1800

Slip clutch and brake

Slipping torque

Large | Small

Select by slipping torque

Torque Keeper | Mini Keeper

Torque Keeper TFK Series



Torque range: 0.59 to 650 N·m

Mini Keeper MK Series



Torque range: 1.96 to 39.2 N·cm

Use the product that satisfies

Packaging machine

Overload protection of cutter drive section

Features ●Auto reset ●Economical

Series Shock Guard TGB Series

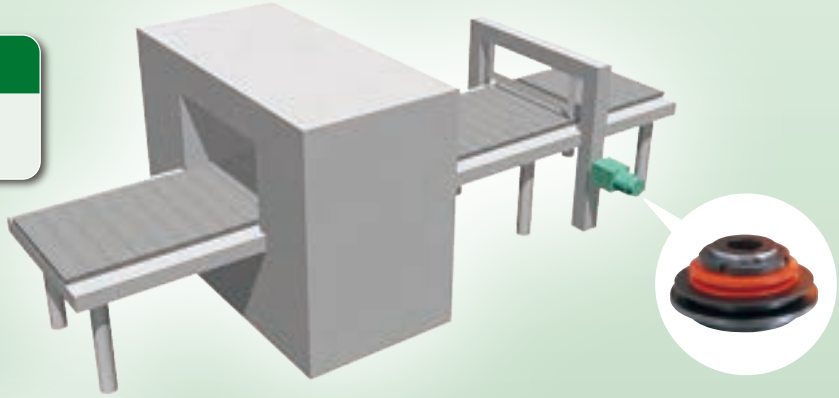

Conveyor

Protects the machine from overload caused by jamming

Features ●Auto reset
●The sprocket can be directly mounted, making it easy to use

Series Torque Limiter

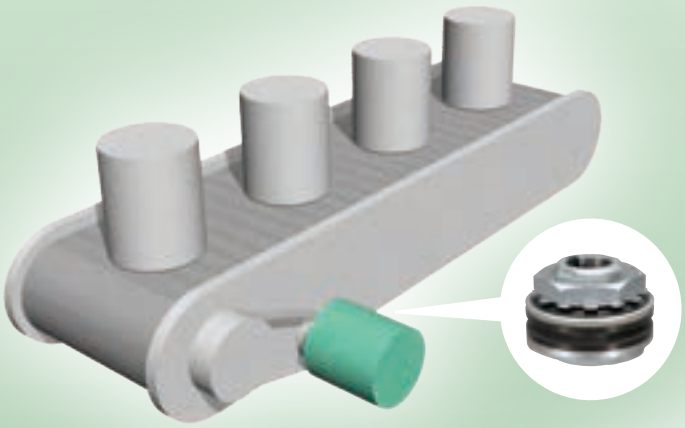

Rotary filling/packaging machine

Protects the machine from jamming

Features ●Auto reset ●Works with wide gears

Series Shock Guard TGE Series

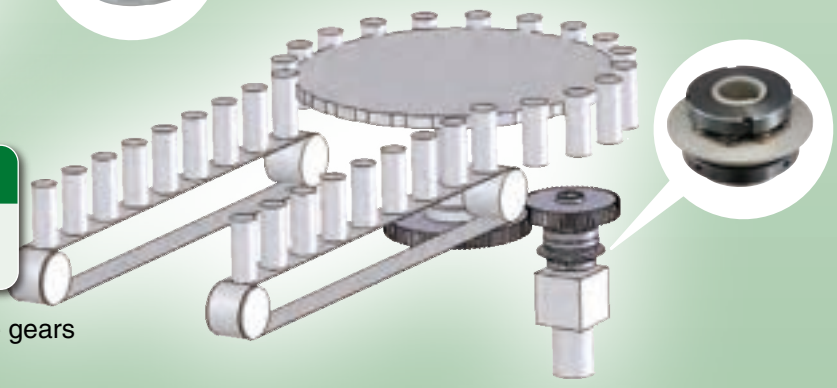

Slip clutch and brake

Continuous slipping makes it ideal for braking, accumulation, and dragging.

Multi-storey carpark

When the table hits the stopper and stops, the Torque Keeper slips to protect the drive section

Features ●Stable slipping torque
●Long life ●Easy installation

Series Torque Keeper TFK Series



your specific application needs

Indexing table

Indexer protection

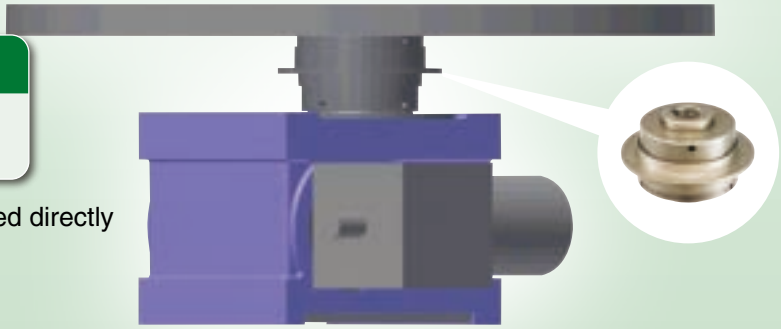

Features
- Indexing table can be mounted directly
- One position
- Auto reset

Series: Shock Guard TGF Series

Small precision printer

Protects the machine from paper jams

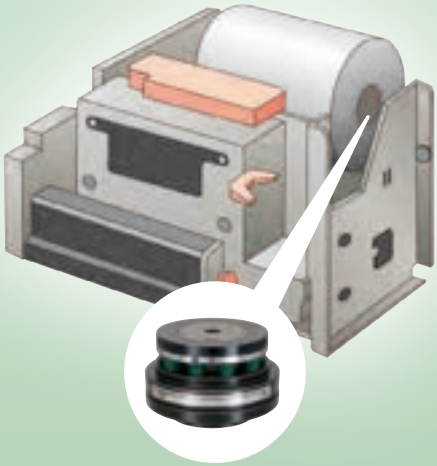

Features: Backlash free, Auto reset, One position

Series: Shock Guard TGX Series

Drum cap sealer

Works when fastening to a specified torque
Remote torque adjustment for products in high places



Features
- Remote torque adjustment
- Clutch function

Series: Shock Guard TGK Series

Pump

Protects the pump from highly viscous material



Features
- Sealed structure
- One position

Series: Shock Guard TGM Series

Wire winding machine

By installing a Mini Keeper on the roll, constant tension allows the wire to wind smoothly

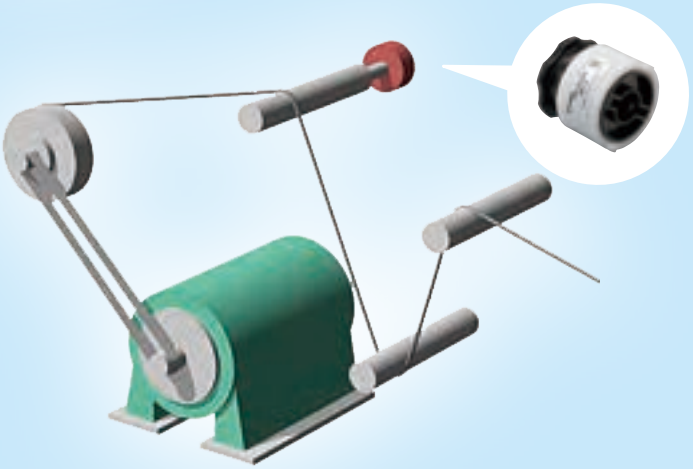

Features
- Continuous slipping
- Provides the optimal tension for the workpiece

Series: Mini Keeper MK Series

VIDEOS

Shock Guard Videos

The videos explain the structure of the Shock Guard series. They can be viewed on a smartphone.



TGB Series

Access the video from this QR code.



TGX Series

Access the video from this QR code.



TGM Series

Access the video from this QR code.

New! Tsubaki Power Transmission Products Information Site

From here users can download information on products and sizing, as well as drawings and catalogs.

https://tt-net.tsubakimoto.co.jp/tecs/top/index.asp?lang=en



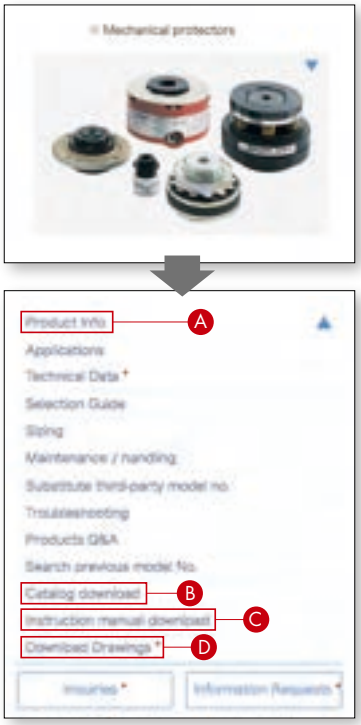



A Product Info

Browse product features and specifications.



B Catalogs

Choose from a range of catalogs and pamphlets to download.

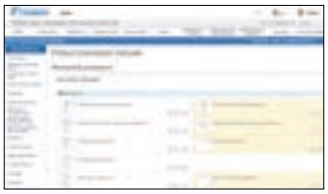

C Instruction Manuals

Download instruction manuals.



D Drawings

Download 3D-CAD data, DXF drawings, and PDF files.

SHOCK GUARD

TORQUE LIMITER






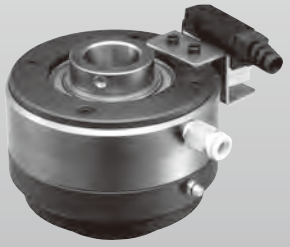


Features, Varieties ---------- p9 to p10

Selection Guide ---------- p11 to p12

Selection ---------- p16 to p18

Shock Guard TGB Series -------- p19 to p32

Shock Guard TGE Series -------- p33 to p38

Shock Guard TGX Series -------- p39 to p48

Shock Guard TGF Series -------- p49 to p60

Shock Guard TGM Series ------- p61 to p68

Shock Guard TGK Series -------- p69 to p76

Torque Limiter ---------- p77 to p87

Mechanical Overload Protectors Shock Guard, Torque Limiter



General use; economical — Shock Guard TGB Series

Easy to use and reasonably priced. Can be used with almost any machine.



Versatile; wide torque range — Shock Guard TGE Series

Compact. Accommodates small-diameter sprockets and wide pulleys.



High precision; high rigidity — Shock Guard TGX Series

No backlash and unsurpassed operation rigidity. Ideal for machines that require accurate positioning.



Ideal for indexers — Shock Guard TGF Series

Superb resetting accuracy.



Sealed structure — Shock Guard TGM Series

Sealed structure and superb accuracy. Excels in wet, dusty, and oily applications.

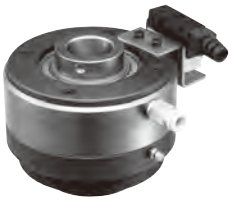

Pneumatic clutch — Shock Guard TGK Series

Allows remote torque adjustments during operation.



Frictional — Torque Limiter

Traditional friction type overload protector. The most economical in our range and easy to use.

Mechanical Overload Protector Varieties

We provide a wide range of mechanical overload protectors to meet the diverse needs of our customers.
Refer to the chart below to choose the functions and device characteristics that best suit your needs.

Product name / Function, capacity	Shock Guard					
	TGB Series				TGE Series	TGF Series
	Compact size (TGB08 to TGB16)	Medium size (TGB20 to TGB70)	Large size (TGB90 to TGB130)	With sprocket (TGB20 to TGB70)		
Torque range [N·m]	0.3 to 11	9.8 to 1080	441 to 7150	9.8 to 1080	1.0 to 700	6.0 to 4900
Bore size [mm]	6 to 16	10 to 70	44 to 130	10 to 70	12 to 50	10 to 90
Repeated trip accuracy	±10%	±10%	±10%	±10%	±5%	±5%
Backlash	None	Small	Small	Small	Small	Minimal
Reset method	Automatic	Automatic	Automatic	Automatic	Automatic	Automatic
Overload detection	TG Sensor	TG Sensor	TG Sensor	TG Sensor	TG Sensor	TG Sensor
Torque scale	Yes	Yes	Yes	Yes	None	Yes
Exterior						

Product name / Function, capacity	Shock Guard		
	TGX Series	TGM Series	TGK Series
Torque range [N·m]	1.5 to 784	0.6 to 1060	15 to 392
Bore size [mm]	9 to 70	10 to 60	10 to 45
Repeated trip accuracy	±5%	±5%	±5%
Backlash	None	None	Minimal
Reset method	Automatic	Automatic	Automatic
Overload detection	TG Sensor	Limit switch	Limit switch
Torque scale	Yes	Yes	None*1
Exterior			

*1 Adjust the regulator pressure to adjust the torque.

Product name / Function, capacity	Torque Limiter
	TL
Torque range [N·m]	1.0 to 9310
Bore size [mm]	9 to 130
Repeated trip accuracy	—
Backlash	None*2
Reset method	Automatic
Overload detection	Proximity switch Tachometer
Torque scale	None
Exterior	

*2 Only for unidirectional operation.

Series Selection Guide

We have the right mechanical overload protector for your particular needs. Use the following charts to select the optimal device for your machine.

For machines that require precision in positioning and indexing

One-position reset function	
TGB Series	Yes
TGE Series	Yes
TGX Series	Yes
TGF Series	Yes
TGM Series	Yes
TGK Series	Yes

One-position

The unique structure lets the drive and driven sides engage in only one position. After tripping the Shock Guard resets and engages in its original position.

Backlash	
TGB Series	Small
TGE Series	Small
TGX Series	None
TGF Series	Minimal
TGM Series	None
TGK Series	Minimal

Backlash

Backlash refers to the gap or clearance between the drive side and driven side during normal operation.

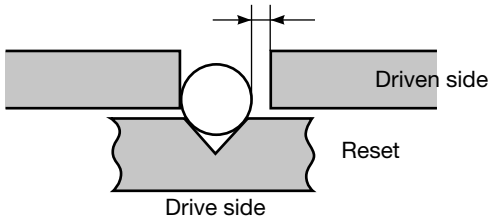

Repeated trip accuracy	
TGB Series	±10%
TGE Series	±5%
TGX Series	±5%
TGF Series	±5%
TGM Series	±5%
TGK Series	±5%

Repeated trip accuracy

This represents the deviation caused by repeated tripping.

For machines that require automatic resetting after the overload is removed

TGB Series	Automatic reset
TGE Series	
TGX Series	
TGF Series	
TGM Series	
TGK Series	

Automatic reset

After overload is removed, the overload detection function is reset automatically by inching either the drive or driven side.



For machines that require to run freely after disengagement

TGK Series*	Full release

*Only if the pneumatic pressure is zero for the TGK series.

Full release

This function completely eliminates transmission of the drive side rotation to the driven side after tripping. In the automatic reset mechanism, overrun of the drive side after tripping prevents reset collision.

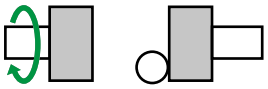

For machines that require an on–off clutch to arbitrarily shut off the rotary power transmission

TGK Series	When pneumatic pressure is zero

ON-OFF function

Arbitrarily transmits or shuts off torque by external force.

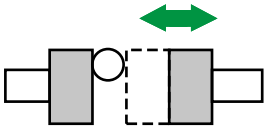

For machines used in highly humid environments

TGM Series	Sealed structure

Sealed structure

Sealed structure using an O-ring. Under normal usage conditions there is no need to refill the grease.



Selection

Shock Guards are most effective as a safety device when they are installed closest to the driven machine where an overload is likely to occur. In principle, avoid using the Shock Guard with personnel transport devices and lifting equipment. If they are to be used, measures should be taken by the equipment side to prevent serious injury or death from falling objects.

1. Selecting the trip torque

$$T_P = T_L \times S.F = \frac{60000 \times P}{2\pi \cdot n} \times S.F \quad \{T_P = \frac{974 \times P}{n} \times S.F\}$$

T_P = Trip torque	N·m {kgf·m}	T_L = Load torque	N·m {kgf·m}
P = Power	kW	S.F = Service factor	
n = rpm	r/min		

(1) Set the trip torque equal to the maximum amount of torque that can be applied (limit value) based on such conditions as the strength of the machine and load.

(2) If the limit value is not clear, calculate the rated torque from the rated output and the shaft rpm onto which the Shock Guard will be installed. Then, multiply by the service factor in Table 1 depending on the operating conditions to determine the trip torque.

Table 1

S.F	Operating conditions
1.25	Normal start-up/stop, intermittent operation
1.50	Heavy shock load or forward-reverse driving

2. When the rpm is relatively high

When the rpm is relatively high (500 r/min or higher) or when the load inertia is large, depending on the motor's starting torque, there is a chance the Shock Guard will trip. In this case, determine the inertia ratio, calculate the torque acting on the Shock Guard during start-up, and multiply this by the service factor to obtain the trip torque.

$$K = \frac{I_L + I_t}{I_s} \left\{ K = \frac{GD_L^2 + GD_t^2}{GD_s^2} \right\} \quad T_t = \frac{K \cdot T_s + T_L}{1 + K} \quad T_p = SF \cdot T_t$$

K : Inertia ratio

I_s : Drive side moment of inertia (kg·m²)

$\{GD_s^2$: Drive side GD² (kgf·m²)$\}$

I_L : Load side moment of inertia (kg·m²)

$\{GD_L^2$: Load side GD² (kgf·m²)$\}$

I_t : Shock Guard moment of inertia (kg·m²)

$\{GD_t^2$: Shock Guard GD² (kgf·m²)$\}$

T_s : Motor starting torque (N·m){kgf·m}

T_t : Torque acting on Shock Guard during start-up (N·m){kgf·m}

T_L : Load torque (N·m){kgf·m}

T_P : Trip torque (N·m){kgf·m}

S.F. : Service factor

Note: Use the equivalent value to the shaft in which the Shock Guard is installed for each moment of inertia, GD², and torque value.

3. Precautions when deciding the trip torque

If the torque acting on the Shock Guard at start-up becomes larger than the load torque, the trip torque value will also become large, causing a problem in overload protection. (The trip torque is too large for the load torque.) In this case install the Shock Guard as close to the load side as possible.

4. Determining the model number

Choose a model where the calculated trip torque is within the minimum to maximum torque range.

5. Confirming the bore diameter

Confirm that the shaft to which the Shock Guard will be installed is within the allowable bore diameter range of the selected Shock Guard model. (Refer to the dimensions table.) If the shaft diameter is larger than the allowable bore range, select a model one size larger that uses a weak spring.

6. Confirming the rpm

Confirm that the Shock Guard rpm used is within the maximum rpm value in this catalog.

Notes for Design

- When selecting the size based on the torque, make sure that the preset torque is 80% or less of the upper limit of the Shock Guard's torque capacity. This is to allow a margin for readjustment, considering the decline in torque due to wear after many years of use.
- When using an induction motor or a similar device as the drive motor, it's important to consider the starting torque. In addition, if the machine generates strong vibrations, these vibrations should be considered when setting the torque. This is because the Shock Guard may trip in response to a momentary overload, resulting in a trip at a torque lower than the calculated torque.
- When using the Shock Guard in intermittent drive units such as indexers, if the difference between the set torque and the normal peak torque is small, load fluctuations during the operation will cause the drive balls to oscillate inside the pockets. This will result in mechanical vibration and abnormal wear inside the Shock Guard. Therefore, set the torque as high as possible within the range that can protect the equipment.
- Repeated trip accuracy is the value at the time of shipment.
- Driving method
  When using the Shock Guard with V-belt pulleys or timing pulleys, confirm that the radial load caused by belt tension does not exceed the allowable load. Contact a Tsubaki representative if the load exceeds the allowable load.
- Coupling
  Select the appropriate type according to your usage conditions after checking whether it satisfies the allowable values.
- Reset speed
  The reset speed must be as low as possible. The reset speed varies depending on factors such as the inertia of the driven-side machinery, the elasticity of the drive side, and the torque setting of the Shock Guard. In most cases, 50 r/min or less should be sufficient. If it is impossible to reset at low speed, try "jogging" the motor.

⚠ Do not manually reset the Shock Guard by turning the main unit or shaft as this can be dangerous.

Minimum Number of Sprocket Teeth

For sprocket machining dimensions, refer to the description pages of each series.

● TGB Series

Model no.	Min. number of sprocket teeth							
	RS40	RS50	RS60	RS80	RS100	RS120	RS140	RS160
TGB08-L,M,H	14	12	13 (10)					
TGB12-L,M,H	16	13	13 (11)					
TGB16-L,M,H	18	15	14					
TGB20-H	26	22	19	15	13	13 (11)		
TGB30-L,H	32	26	22	18	15	13		
TGB50-L,M,H	45 (43)	35	30	24	20	17		
TGB70-H	60 (58)	48 (47)	40	32 (31)	26	24 (22)		
TGB90-L,H		62	52	40	33	28	25	22
TGB110-L,H		74	62	48	39	33	29	26
TGB130-L,H		83	70	53	43	37	32	29

Note: The numbers of teeth in parentheses are not for type A sprockets. If possible, use sprockets with a larger number of teeth.

● TGE Series

Type 1

Model no.	Min. number of sprocket teeth				
	RS35	RS40	RS50	RS60	RS80
TGE17-1	18	14	12	—	—
TGE25-1	25	20	17	15	12
TGE35-1	32	25	20	18	14
TGE50-1	—	31	26	22	17

Minimum number of teeth when mounting the boss of a special Type B sprocket to a connection adaptor.

Type 3

Model no.	Min. number of sprocket teeth				
	RS35	RS40	RS50	RS60	RS80
TGE17-3	23	18	15	—	—
TGE25-3	32	25	21	18	14
TGE35-3	39	30	25	21	17
TGE50-3	—	40	33	28	22

● TGM Series

Model no.	Min. number of sprocket teeth							
	RS25	RS35	RS40	RS50	RS60	RS80	RS100	RS120
TGM3	*30	22	17	15				
TGM6	*30	22	17	15				
TGM20	*34	24	19	16	14			
TGM60		*32	26	21	18	15		
TGM200			*37	30	26	20	17	
TGM400				*41	35	*27	24	20
TGM800				*41	35	*27	24	20

Note: The numbers marked with * are not standard numbers of teeth.
Insert the joint link from the outside of the sprocket.

● TGK Series

Model no.	Min. number of sprocket teeth				
	RS35	RS40	RS50	RS60	RS80
TGK20	30	24	20	17	—
TGK30	37	29	24	20	16
TGK45	50	38	32	27	21

Note: The above shows sprockets with the minimum number of teeth that can be installed on all products. The sprocket transmission capacity is not considered, so refer to the *Tsubaki Drive Chains & Sprockets* catalog for sprocket selection and handling.

Maintenance

1. Shock Guard (TGB)

Lightly coat the balls and bearings with grease once a year or every 1,000 trips.

- **Grease**

EMG Lubricants	ENEOS	Shell Lubricants Japan	Idemitsu Kosan	Cosmo Oil
Mobilux EP2	Epnoc Grease AP (N) 2	Alvania EP Grease 2	Daphne Eponex Grease MP No.2	Cosmo Grease Dynamax EP No. 2

Note: The above product names are trademarks or registered trademarks of their respective owners.

2. Coupling (TGB20-C to TGB130-C)

- **Grease the roller chain and sprocket with the same grease as the Shock Guard above.**

3. Sprocket

- **For more information on sprocket and roller chain maintenance, refer to the *Tsubaki Drive Chains & Sprockets* catalog.**
- **The sprocket may wear if the sprocket and roller chain are used for a long period, even if the frequency and number of trips are very low. Inspect the sprocket regularly for wear. Refer to the *Tsubaki Drive Chains & Sprockets* catalog for inspection procedures.**

TG Sensor

The TG Sensor is a proximity switch-type overload detector exclusively for the Shock Guard. It detects Shock Guard overload (axial movement of the plate) to stop the motor and signal a warning alarm. (Except for the TGM and TGK series.)

		AC type	DC type
Model no.		**TGS8**	**TGS8DN**
Supply voltage	Rating	24 to 240 V AC	–
	Usable range	20 to 264 V AC (50/60 Hz)	10 to 30 V DC
Power consumption		Under 1.7 mA (at 200 V AC)	Under 16 mA
Control output (opening/closing capacity)		5 to 100 mA	Max. 200 mA
Indicator lamp		Operation indicator	
Ambient operating temperature		–25 to +70°C (no freezing)	
Ambient operating humidity		35 to 95% RH	
Output mode		–	NPN
Operation mode		NC (Shows the output opening/closing status when the sensor plate is not detected.)	
Insulation resistance		50 MΩ or more (500 V DC megger) between the charging section and casing	
Mass		Approx. 45 g (cable length 2 meters)	Approx. 56 g (cable length 2 meters)
Residual voltage		Refer to characteristics data (p18)	2.0 V or less (load current 200 mA; cable length 2 meters)

■ Dimensional Drawings

- **AC type TGS8**

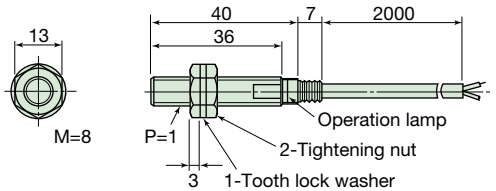

- **DC type TGS8DN**

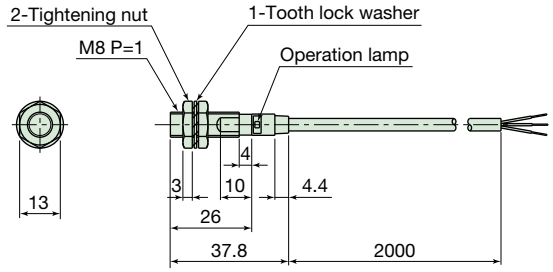

■ TG Sensor Handling

Note: Do not swing the TG Sensor around, pull it with excessive force, or hit the detector unit with an object.

AC type TGS8

• Circuit diagram

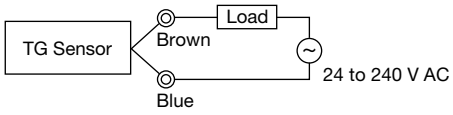

No need to consider the polarity of the TG Sensor (brown/blue).

• Wiring precautions

• Make sure to connect the load before turning on the power. Otherwise, the machine may be damaged.

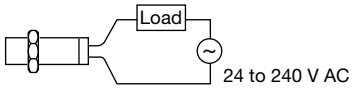

• To prevent damage from surges and noise, insert the TG Sensor cord inside a separate electrical conduit when it runs close to the power cable.

DC type TGS8DN

• Circuit diagram

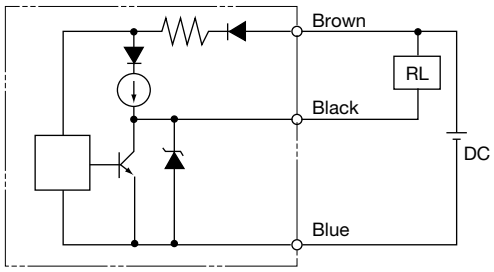

■ Overload Detection (TG Sensor Handling)

• The detection range of the TG Sensor is 1.5 mm. Set the TG Sensor to the dimensions (s, t) in the chart below, with the Shock Guard not tripping. Confirm that the TG Sensor is in a non-detecting state. (The operation indicator lamp on its side turns on.)
• Next, trip the Shock Guard. Then while rotating the disengaged Shock Guard by hand, verify that the TG Sensor is functioning (the operation indicator lamp on its side turns off) and that there is no interference with the sensor plate. Finally, reset the Shock Guard .

• Installation diagram TGB08 to TGB16

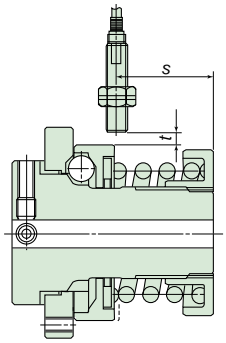

Unit: mm

	s	*t*	Sensor plate travel
TGB08-L,M,H	19.2	1.2	0.9
TGB12-L,M,H	22.7	1.2	1.0
TGB16-L,M,H	27.5	1.2	1.2

• Installation diagram TGB70 to TGB130

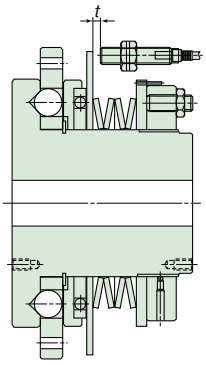

Unit: mm

	t	Sensor plate travel
TGB70-H	3.5 to 4.7	3.3
TGB90-L,H	5.6 to 6.8	5.4
TGB110-L,H	6.2 to 7.4	6.0
TGB130-L,H	6.8 to 8.0	6.6

• Installation diagram TGB20 to TGB50

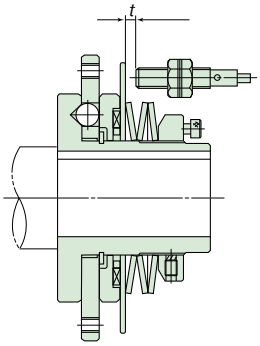

Unit: mm

	t	Sensor plate travel
TGB20-H	2.0 to 3.2	1.8
TGB30-L,H	2.2 to 3.4	2.0
TGB50-L,M,H	2.9 to 4.1	2.7

• Installation diagram TGE17 to TGE50

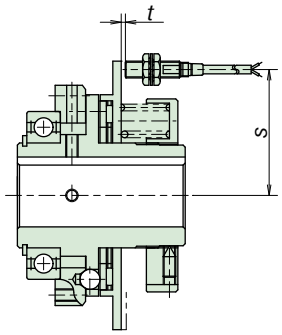

Unit: mm

Type \ Dimension	s	t	Housing travel
TGE17	34	2.2±0.2	1.6
TGE25	48	2.6±0.2	2.0
TGE35	60	3.0±0.2	2.4
TGE50	80	3.8±0.2	3.2

• Installation diagram TGX10 to TGX70

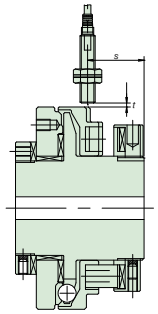

Unit: mm

Type \ Dimension	s	t	Plate travel
TGX10	29.9	1.2	1.4
TGX20	28.3	1.2	1.6
TGX35	29.5	1.2	2.0
TGX50	35.6	1.2	2.6
TGX70	34.5	1.2	3.5

Note: The TG Sensor can only be attached to the Shock Guard in the radial direction as shown to the left.

• Installation diagram TGX10-C to TGX70-C

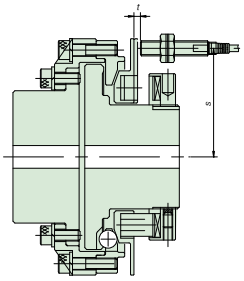

Unit: mm

Type \ Dimension	s	t	Plate travel
TGX10-C	36.5	2.1 to 2.8	1.3
TGX20-C	45	2.4 to 3.1	1.6
TGX35-C	59	2.7 to 3.4	1.9
TGX50-C	83	3.2 to 3.9	2.4
TGX70-C	105	4.1 to 4.8	3.3

Note: When mounting a TG Sensor to a coupling type Shock Guard, we recommend mounting it horizontally as shown to the left. Contact a Tsubaki representative when mounting the TG Sensor in the radial direction.

• Installation diagram TGF20 to TGF90

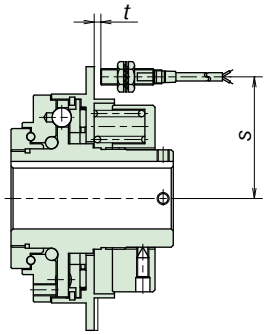

Unit: mm

Type \ Dimension	s	t	Housing travel
TGF20	46	1.8±0.2	1.2
TGF30	60	2.4±0.2	1.8
TGF45	78	2.8±0.2	2.2
TGF65	100	3.3±0.2	2.7
TGF90	136	5.6±0.2	5.0

■ Overload Selection and Wiring (AC type TGS8)

- **Connecting to a power source**

  Make sure to connect via load. A direct connection will damage the internal elements.

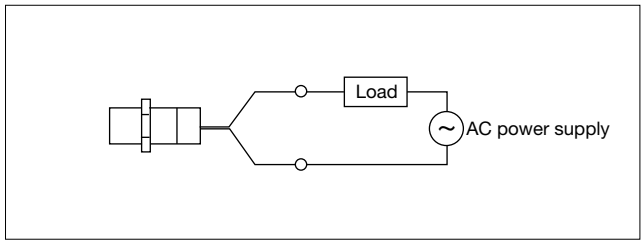

- **Using a metal electrical conduit**

  In order to prevent malfunction or damage, insert the proximity switch cord inside a metal electrical conduit when it runs close to the power cable.

- **Surge protection**

  The TG Sensor has a built-in surge absorbing circuit. If the TG Sensor is to be used near a motor, welding machine, or other device that could generate a large surge, consider inserting a surge absorber such as a varistor at the source of the surge.

- **Effect of current consumption (leakage)**

  Even when the TG Sensor is turned off, a small amount of current flows to keep the circuit running. (Refer to the Current Consumption [Leakage] Characteristics graph.) Consequently, because there is a small amount of voltage on the load, the occurring load may malfunction when resetting. Before using the sensor, confirm that this voltage is less than the load return voltage. Note that when using a relay as the load, a buzz may sound when the leakage current is off due to the relay's construction.

- **When power supply voltage is low**

  When the power supply voltage is less than AC 48 V and the load current is 10 mA or less, the output residual voltage will be large when the TG Sensor is on, and the load residual voltage will be large when it is off. (Refer to the Load Residual Voltage Characteristics graphs.) Be careful when using a relay or other voltage-activated load.

- **When load current is small**

  When load current is less than 5 mA, load residual voltage becomes large in the TG Sensor. (Refer to the Load Residual Voltage Characteristics graphs.)
  In such a case, connect the bleeder resistor and load in a parallel formation as in the diagram below, and allow the load voltage to flow at least 5 mA so that residual voltage is less than the load return voltage.
  Calculate the bleeder resistor value and allowable power using the following formula. We recommend using 20 kΩ and 1.5 W (3 W) or more at 100 V AC, and 39 kΩ and 3 W (5 W) or more at 200 V AC.
  Note: When heat build-up becomes a problem, use the wattage in ( ) and above.

$$R \leq \frac{V}{5 - i}\ (k\Omega)$$

$$P \leq \frac{V_s^2}{5 - i}\ (mW)$$

P: Bleeder resistor wattage (In practice, use wattage several times more.)
i : Load current (mA)

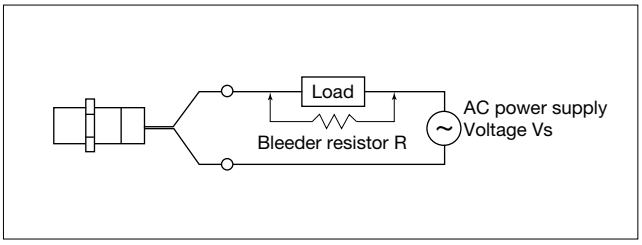

- **Large inrush current load**

  A load with a large inrush current (1.8 A or more), such as a lamp or motor can cause damage or deterioration to the switching elements of the sensor. In such a case, use the sensor via a relay.



- **Current Consumption (Leakage) Characteristics**

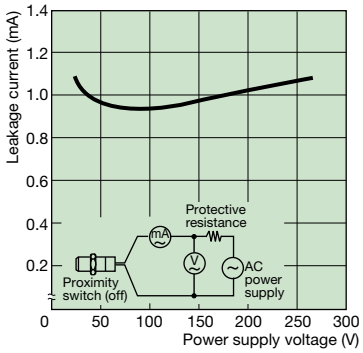

- **Load Residual Voltage Characteristics**

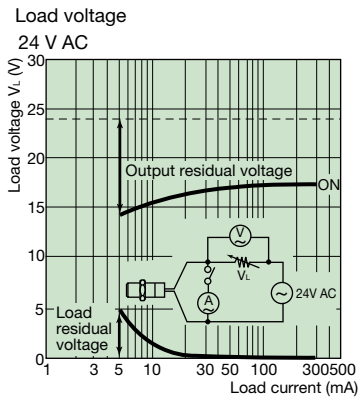

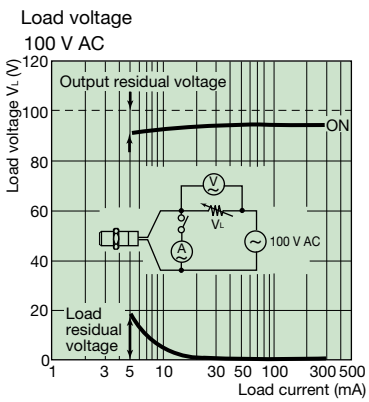

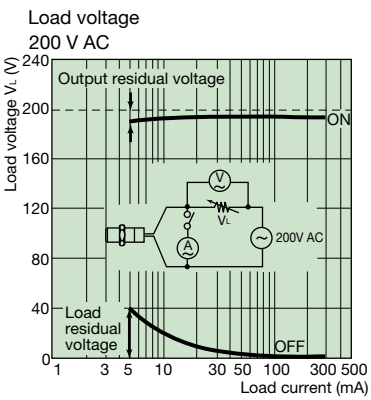

Shock Guard TGB Series

Features

Easy to use and reasonably priced.
Can be used with almost any machine.

A wide variety of sizes

Available in 58 sizes, ranging from 0.3 N·m to 7154 N·m.

Easy torque adjustment

Trip torque can be easily adjusted simply by turning the adjustment nut (bolt).

Automatic reset

After removing the cause of overload, the TGB Series automatically re-engages by rotating the drive side.

Compact and precise

(TGB08 to TGB16)
Ideal for use in compact motors, robots, and compact precision machines.

One-position design

The balls and pockets, which transfer the torque, are arranged in a unique way in which they engage in only one position.

Backlash-free

TGB08 to TGB16 only.
Backlash may occur in the coupling portion of a coupling type model.









Structure and Operating Principles

TGB08 to TGB16

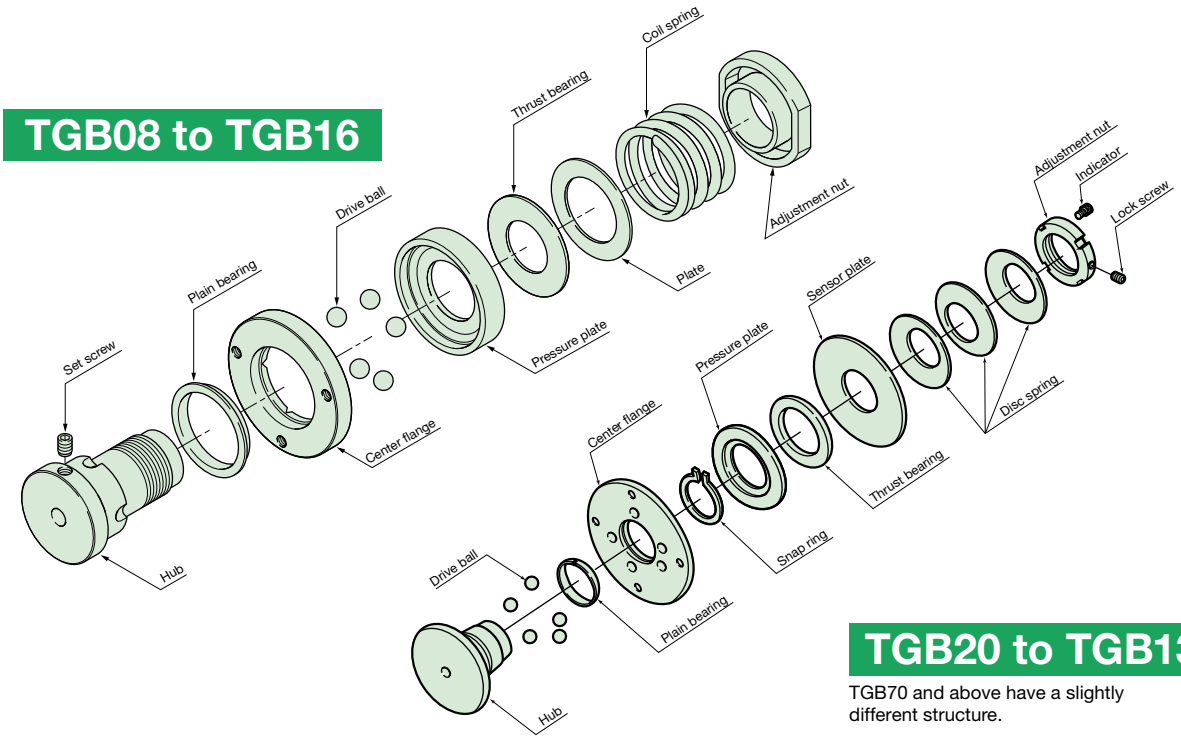

TGB20 to TGB130

TGB70 and above have a slightly different structure.

TGB08/12/16

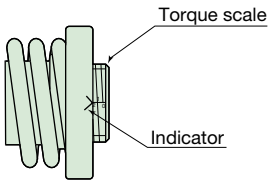

TGB20/30/50

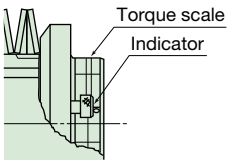

TGB70/90/110/130

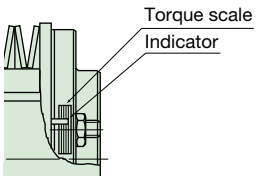

TGB08 to TGB16

During normal operation (engagement)

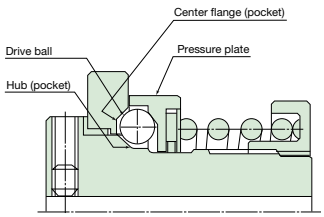

Torque is transmitted through multiple drive balls. The asymmetrical arrangement of the drive balls allows them to engage in only one position. There is no backlash due to the engagement of the pocket and drive balls, which are held and pressurized so that there are no gaps.
Torque is transmitted from the center flange (pocket) → drive balls → hub (pocket) → shaft (or vice versa).

During overload (tripping)

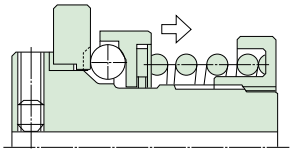

When the TGB Series trips due to overload, the drive ball pops out of the center flange pocket and slides between the pressure plate and center flange.

TGB20 to TGB50

The principle of operation is the same for TGB70 to TGB130.

During normal operation (engagement)

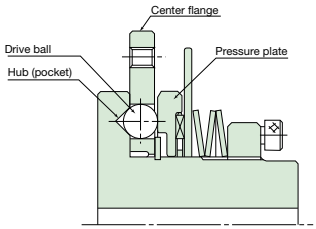

Torque is transmitted through multiple drive balls. The asymmetrical arrangement of the drive balls allows them to engage in only one position. Torque is transmitted from the center flange → drive balls → hub (pocket) → shaft (or vice versa).

During overload (tripping)

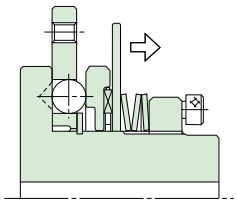

When the TGB Series trips due to overload, the drive ball pops out of the hub pocket and rolls between the pressure plate and hub. All rotating parts are supported by the thrust bearing during tripping, ensuring easy and smooth rotation.

Transmission Capacity and Dimensions

■ TGB08 to TGB16

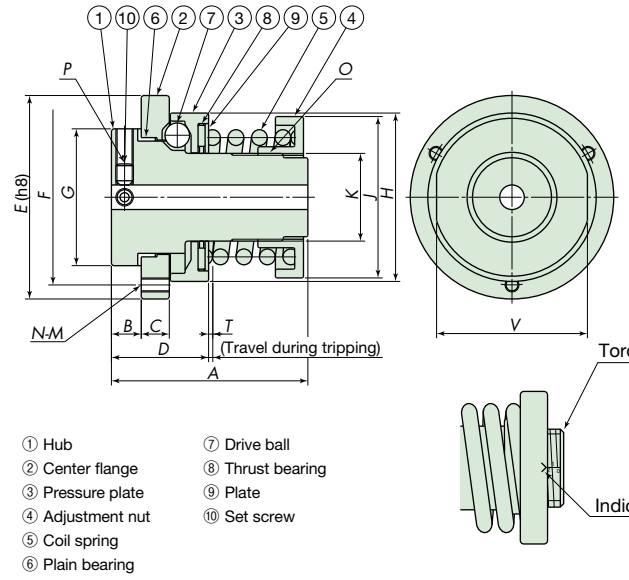

① Hub
② Center flange
③ Pressure plate
④ Adjustment nut
⑤ Coil spring
⑥ Plain bearing
⑦ Drive ball
⑧ Thrust bearing
⑨ Plate
⑩ Set screw

■ TGB20 to TGB50

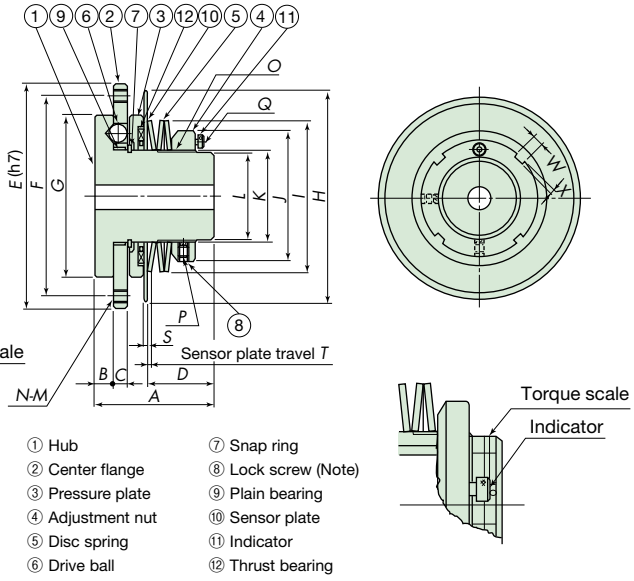

① Hub
② Center flange
③ Pressure plate
④ Adjustment nut
⑤ Disc spring
⑥ Drive ball
⑦ Snap ring
⑧ Lock screw (Note)
⑨ Plain bearing
⑩ Sensor plate
⑪ Indicator
⑫ Thrust bearing

Note: The adjustment nut is temporarily fastened with one lock screw. After setting to the optimal torque, retighten the lock screw with the torque amount given below. (TGB20/30/50)
Lock screw size: M5…3.8 N·m {38.7 kgf·cm}

Unit: mm

Model no.	Torque range N·m	Max. rpm	Spring color	Pilot bore dia.*1	Min. bore dia.	Max. bore dia.	A	B	C	D	E	F P.C.D	G	H	I
TGB08-L	0.3 to 1.4	1200	Yellow	5	6	8	39	6.5	5	20	40	34	26	33	—
TGB08-M	0.8 to 2.1		Blue												
TGB08-H	1.2 to 2.9		Orange												
TGB12-L	0.7 to 2.9	1000	Yellow	6	8	12	47	8	6	23.5	48	40	32	40	—
TGB12-M	2.0 to 4.9		Blue												
TGB12-H	3.0 to 5.8		Orange												
TGB16-L	1.5 to 4.9	900	Yellow	7	9	16	56	8.5	8	27.7	58	50	39	48	—
TGB16-M	3.0 to 7.8		Blue												
TGB16-H	5.9 to 11		Orange												
TGB20-H	9.8 to 44	700	Orange	8	10	20	47	7.5	5.7	25	90	78	62	82	54
TGB30-L	20 to 54	500	Yellow	12	14	30	60	9.5	7	33	113	100	82	106	75
TGB30-H	54 to 167		Orange												
TGB50-L	69 to 147	300	Yellow	22	24	50	81	14.5	8.5	44.8	160	142	122	150	116.7
TGB50-M	137 to 412		Blue												
TGB50-H	196 to 539		Orange												

Model no.	J	K	L	M	N	O Screw dia. × pitch	P Screw dia. × length	Q Screw dia. × length	S	T	W	X	V	Retaining ring size Y	Mass*2 kg	Moment of inertia*2 ×10^{-2} kg·m^2
TGB08-L	29.5	15	—	M 3	3	M15×1	M3×4	—	—	0.9	—	—	28	—	0.14	0.0025
TGB08-M																
TGB08-H																
TGB12-L	35	20	—	M 4	3	M20×1	M4×6	—	—	1	—	—	35.5	—	0.24	0.0065
TGB12-M																
TGB12-H																
TGB16-L	46	25	—	M 4	3	M25×1.5	M5×6	—	—	1.2	—	—	43	—	0.44	0.018
TGB16-M																
TGB16-H																
TGB20-H	48	32	30	M 5	4	M32×1.5	M5×8	M4× 8	2	1.8	5	2	—	32	0.9	0.058
TGB30-L	65	45	42.5	M 6	6	M45×1.5	M5×8	M4×10	2	2	6	2.5	—	45	2	0.2
TGB30-H																
TGB50-L	98	75	70	M 8	6	M75×2	M5×8	M4×14	3	2.7	8	3.5	—	75	5.9	1.21
TGB50-M																
TGB50-H																

*1. All pilot-bore models are in stock.
*2. Mass and moment of inertia are based on the maximum bore diameter.

■ TGB70 to TGB90

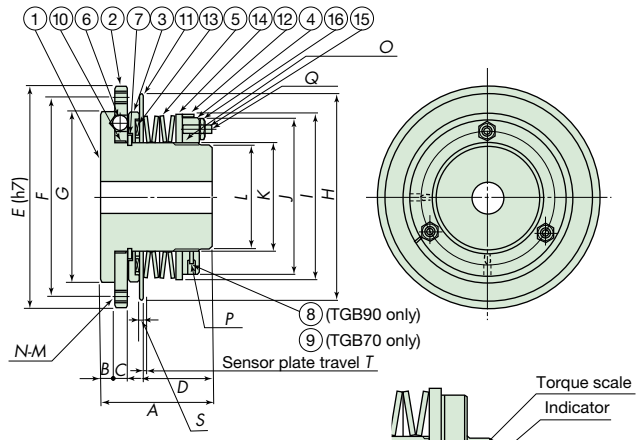

① Hub
② Center flange
③ Pressure plate
④ Adjustment nut
⑤ Disc spring
⑥ Drive ball
⑦ Snap ring
⑧ Set screw
⑨ Lock screw (Note)
⑩ Plain bearing
⑪ Sensor plate
⑫ Indicator
⑬ Thrust bearing
⑭ Spring retainer
⑮ Adjustment bolt
⑯ Lock nut

■ TGB110 to TGB130

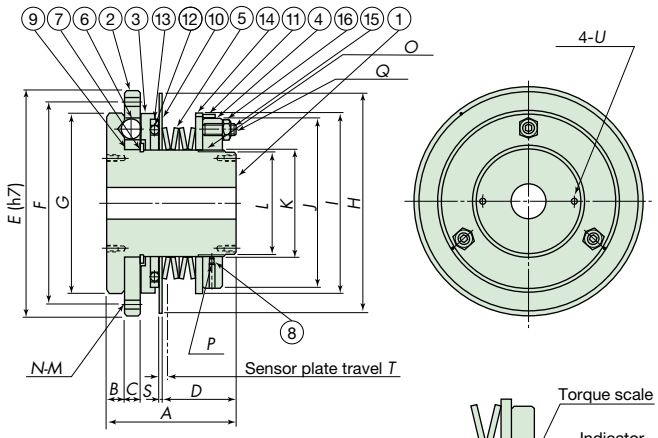

① Hub
② Center flange
③ Pressure plate
④ Adjustment nut
⑤ Disc spring
⑥ Drive ball
⑦ Snap ring
⑧ Set screw
⑨ Plain bearing
⑩ Sensor plate
⑪ Indicator
⑫ Ball
⑬ Retainer plate
⑭ Pilot plate
⑮ Adjustment bolt
⑯ Lock nut

Note: The adjustment nut is temporarily fastened with one lock screw. After setting to the optimal torque, retighten the lock screw with the torque amount given below. (TGB70)
Lock screw size: M5…3.8 N·m {38.7 kgf·cm}

Unit: mm

Model no.	Torque range N·m	Max. rpm	Disc spring color	Pilot bore dia.*1	Min. bore dia.	Max. bore dia.	*A*	*B*	*C*	*D*	*E*	*F* P.C.D	*G*	*H*	*I*
TGB 70-H	294 to 1080	160	Orange	32	34	70	110	14.5	12	68.5	220	200	170	205	166
TGB 90-L	441 to 1320	120	Yellow	42	44	90	157	25	22	88.6	295	265	236	290	213
TGB 90-H	931 to 3140		Orange												
TGB110-L	686 to 1960	100	Yellow	52	54	110	195	30	25	105	355	325	287	345	278
TGB110-H	1570 to 5100		Orange												
TGB130-L	1180 to 3040	80	Yellow	60	62	130	230	35	27	130	400	360	319	390	316
TGB130-H	2650 to 7150		Orange												

Model no.	*J*	*K*	*L*	*M*	*N*	*O* Screw dia. × pitch	*P* Screw dia. × length	*Q* Screw dia. × length	*S*	*T*	*U* Screw dia. × length	Retaining ring size *Y*	Mass*2 kg	Moment of inertia*2 ×10^{-2} kg·m^2
TGB 70-H	157	110	106	M10	6	M110×2	M 5×10	M10×28	3	3.3	—	110	17	6.3
TGB 90-L	203	130	124	M12	8	M130×2	M10×20	M16×35	5.5	5.4	M8×16	130	37.5	33.8
TGB 90-H														
TGB110-L	266	160	155	M16	6	M160×3	M12×20	M16×45	7	6	M10×20	160	69.6	91
TGB110-H														
TGB130-L	304	190	184	M16	8	M190×3	M16×30	M20×60	7	6.6	M12×24	190	102	167
TGB130-H														

*1. Pilot bore stock models are shown in bold, and non-bold models are made to order.
*2. Mass and moment of inertia are based on the maximum bore diameter.

Transmission Capacity and Dimensions

Coupling Type

■ TGB08-C to TGB16-C

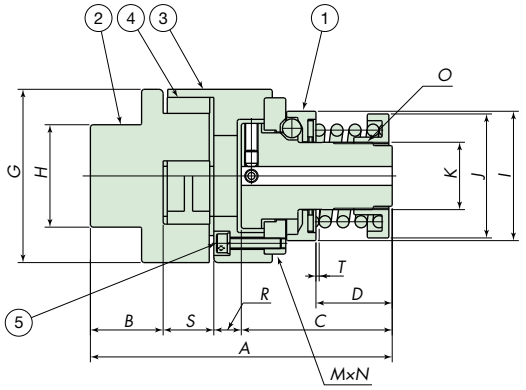

① Shock Guard side
② Coupling hub A
③ Coupling hub B
④ Insert
⑤ Socket bolt

■ TGB20-C to TGB50-C

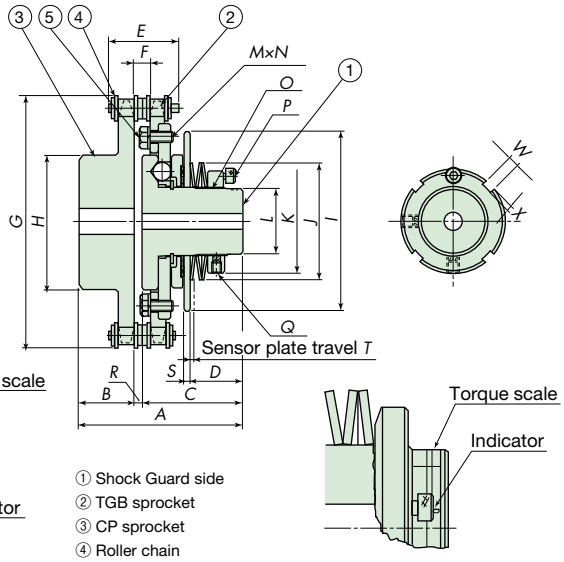

① Shock Guard side
② TGB sprocket
③ CP sprocket
④ Roller chain
⑤ Hexagon bolt

Unit: mm

Model no.	Torque range N·m	Max. rpm	Spring color	Shock Guard			Coupling			A	B	C	D	E	F	G	H	I
				Pilot bore dia.*1	Min. bore dia.	Max. bore dia.	Pilot bore dia.*1	Min. bore dia.	Max. bore dia.									
TGB08-LC	0.3 to 1.4	1200	Yellow	5	6	8	—	6	15	80	20.6	39	19	—	—	44.5	24	33
TGB08-MC	0.8 to 2.1		Blue															
TGB08-HC	1.2 to 2.9		Orange															
TGB12-LC	0.7 to 2.9	1000	Yellow	6	8	12	—	8	20	88	19.9	47	23.5	—	—	53.6	32	40
TGB12-MC	2.0 to 4.9		Blue															
TGB12-HC	3.0 to 5.8		Orange															
TGB16-LC	1.5 to 4.9	900	Yellow	7	9	16	—	9	25	112	27	56	28.3	—	—	64.3	38	48
TGB16-MC	3.0 to 7.8		Blue															
TGB16-HC	5.9 to 11		Orange															
TGB20-HC	9.8 to 44	700	Orange	8	10	20	12.5	14	42	76	25	47	25	32.6	7.4	117.4	63	82
TGB30-LC	20 to 54	500	Yellow	12	14	30	18	20	48	93	28	60	33	40.5	9.7	146.7	73	106
TGB30-HC	54 to167		Orange															
TGB50-LC	69 to147	300	Yellow	22	24	50	18	20	55	126	40	81	44.8	51	11.6	200.3	83	150
TGB50-MC	137 to412		Blue															
TGB50-HC	196 to539		Orange															

Model no.	J	K	L	M × N × quantity	O Screw dia. × pitch	P Screw dia. × length	Q Screw dia. × length	R	S	T	W	X	V	Coupling model no. or sprocket	Mass*2 kg	Moment of inertia*2 ×10^{-2} kg·m^2
TGB08-LC	29.5	15	—	M3×12ℓ×3	M15×1	—	—	7.2	13.2	0.9	—	—	28	L075A	0.235	0.005
TGB08-MC																
TGB08-HC																
TGB12-LC	37	20	—	M4×16ℓ×3	M20×1	—	—	7.9	13.2	1	—	—	35.5	L090A	0.38	0.0123
TGB12-MC																
TGB12-HC																
TGB16-LC	46	25	—	M4×20ℓ×3	M25×1.5	—	—	10.2	18.8	1.2	—	—	43	L100A	0.673	0.0324
TGB16-MC																
TGB16-HC																
TGB20-HC	54	48	30	M5×12ℓ×4	M32×1.5	M4× 8	M5×8	4	2	1.8	5	2	—	RS40-26	2.5	0.313
TGB30-LC	75	65	42.5	M6×16ℓ×6	M45×1.5	M4×10	M5×8	5	2	2	6	2.5	—	RS50-26	4.8	0.948
TGB30-HC																
TGB50-LC	116.7	98	70 5	M8×20ℓ×6	M75×2	M4×14	M5×8	5	3	2.7	8	3.5	—	RS60-30	12.2	4.43
TGB50-MC																
TGB50-HC																

*1. Pilot bore stock models are shown in bold, and non-bold models are made to order.
*2. Mass and moment of inertia are based on the maximum bore diameter.

■ TGB70-C to TGB90-C

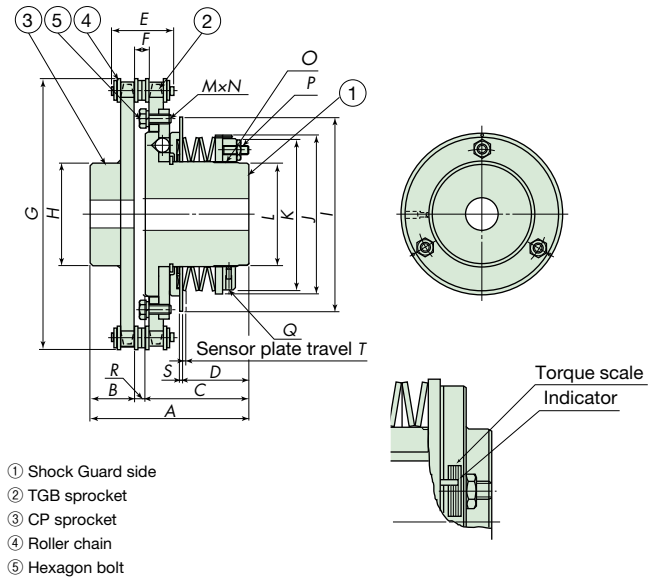

① Shock Guard side
② TGB sprocket
③ CP sprocket
④ Roller chain
⑤ Hexagon bolt

■ TGB110-C to TGB130-C

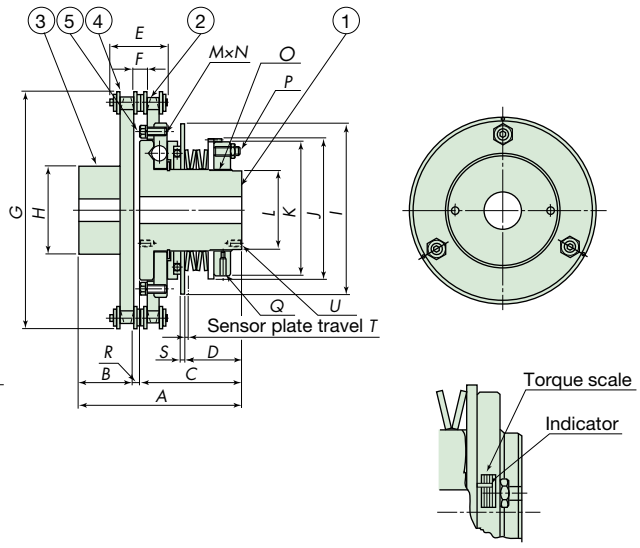

Unit: mm

Model no.	Torque range N·m	Max. rpm	Spring color	Shock Guard			Coupling			A	B	C	D	E	F	G	H	I
				Pilot bore dia.*1	Min. bore dia.	Max. bore dia.	Pilot bore dia.*1	Min. bore dia.	Max. bore dia.									
TGB 70-HC	294 to 1080	160	Orange	32	34	70	28	30	75	165	45	110	68.5	64.8	15.3	283.2	107	205
TGB 90-LC	441 to 1320	120	Yellow	42	44	90	33	35	103	242	80	157	88.6	78.5	18.2	394.4	147	290
TGB 90-HC	931 to 3140		Orange															
TGB110-LC	686 to 1960	100	Yellow	52	54	110	38	40	113	303	100	195	105	99.2	21.9	473.4	157	345
TGB110-HC	1570 to 5100		Orange															
TGB130-LC	1180 to 3040	80	Yellow	60	62	130	53	55	145	365	120	230	130	127.3	29.1	534.2	197	390
TGB130-HC	2650 to 7150		Orange															

Model no.	J	K	L	M × N × quantity	O Screw dia. × pitch	P Screw dia. × length	Q Screw dia. × length	R	S	T	U Screw dia. × length	Sprocket	Mass*2 kg	Moment of inertia*2 ×10^{-2} kg·m^2
TGB 70-HC	166	157	106	M10×25ℓ×6	M110×2	M10×28	M 5× 8	10	3	3.3	—	RS80-32	32.0	22.43
TGB 90-LC	213	203	124	M12×35ℓ×8	M130×2	M16×35	M10×20	5	5.5	5.4	M 8×16	RS100-36	71.1	117.32
TGB 90-HC														
TGB110-LC	278	266	155	M16×45ℓ×6	M160×3	M16×45	M12×20	8	7	6	M10×20	RS120-36	130.5	314.15
TGB110-HC														
TGB130-LC	316	304	184	M16×50ℓ×8	M190×3	M20×60	M16×30	15	7	6.6	M12×24	RS160-30	202.3	632.66
TGB130-HC														

*1. Pilot bore stock models are shown in bold, and non-bold models are made to order.
*2. Mass and moment of inertia are based on the maximum bore diameter.

Transmission Capacity and Dimensions

TGB with Sprocket

■ TGB20- □ to TGB50- □

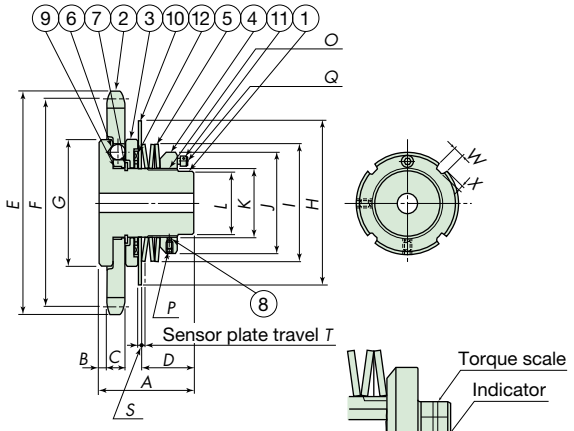

① Hub
② Center sprocket
③ Pressure plate
④ Adjustment nut
⑤ Disc spring
⑥ Drive ball
⑦ Snap ring
⑧ Lock screw (Note)
⑨ Plain bearing
⑩ Sensor plate
⑪ Indicator
⑫ Thrust bearing

■ TGB70- □

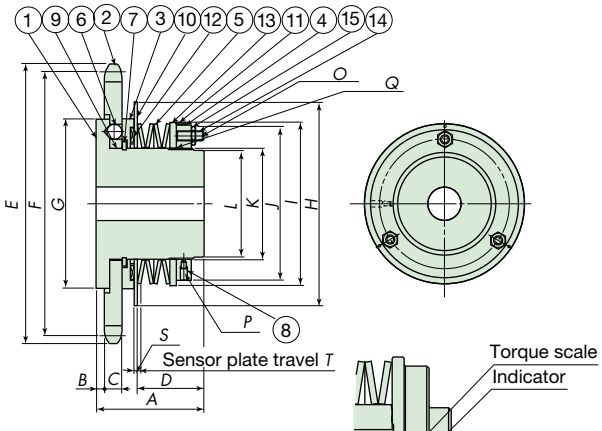

① Hub
② Center sprocket
③ Pressure plate
④ Adjustment nut
⑤ Disc spring
⑥ Drive ball
⑦ Snap ring
⑧ Lock screw (Note)
⑨ Plain bearing
⑩ Sensor plate
⑪ Indicator
⑫ Thrust bearing
⑬ Pilot plate
⑭ Adjustment bolt
⑮ Lock nut

Note: The adjustment nut is temporarily fastened with one lock screw. After setting to the optimal torque, retighten the lock screw with the torque amount given below.
Lock screw size: M5···3.8 N·m {38.7 kgf·cm} M8···16 N·m {163 kgf·cm}

Unit: mm

Model no.	Torque range N·m	Max. rpm	Sprocket*1	Disc spring color	Pilot bore dia.	Min. bore dia.	Max. bore dia.	A	B	C	D	E	F P.C.D	G	H	I
TGB20-H-□	9.8 to 44	700	RS40-22T	Orange	8	10	20	47	5.9	7.2	25	96	89.24	62	82	54
			RS40-27T									116	109.4			
TGB30-L-□	20 to 54	500	RS60-19T	Yellow	12	14	30	60	4.8	11.6	33	126	115.74	82	106	75
TGB30-H-□	54 to 167		RS60-24T	Orange								156	145.95			
TGB50-L-□	69 to 147	300	RS80-20T	Yellow	22	24	50	81	8.4	14.5	44.8	176	162.37	122	150	116.7
TGB50-M-□	137 to 412			Blue												
TGB50-H-□	196 to 539		RS80-25T	Orange								216	202.66			
TGB70-H-□	294 to1080	160	RS100-22T	Orange	32	34	70	110	8.9	17.5	68.5	240	223.10	170	205	166
			RS100-26T									281	263.40			

Model no.	J	K	L	O Screw dia. × pitch	P Screw dia. × length	Q Screw dia. × length	S	T	W	X	Retaining ring size Y	Mass*2 kg	Moment of inertia*2 ×10² kg·m²
TGB20-H-□	48	32	30	M 32×1.5	M5× 6	M 4× 8	2	1.8	5	2	32	0.94	0.255
												1.15	0.486
TGB30-L-□	65	45	42.5	M 45×1.5	M5× 6	M 4×10	2	2	6	2.5	45	2.21	1.06
TGB30-H-□												2.78	2.07
TGB50-L-□	98	75	70	M 75×2	M5×10	M 4×14	3	2.7	8	3.5	75	6.35	6.10
TGB50-M-□													
TGB50-H-□												7.66	10.7
TGB70-H-□	157	110	106	M110×2	M5×10	M10×28	3	3.3	—	—	110	17.8	29.4
												19.9	42.5

*1. Specify your preferred sprocket size.
*2. Mass and moment of inertia are based on the maximum bore diameter.
Note: Sprocket model numbers go in the box (□). Refer to the table below for model numbering.

Sprocket Model Numbering

Model no.	TGB20		TGB30		TGB50		TGB70	
Sprocket	RS40-22T	RS40-27T	RS60-19T	RS60-24T	RS80-20T	RS80-25T	RS100-22T	RS100-26T
Model numbering	04022	04027	06019	06024	08020	08025	10022	10026

Shock Guard Finished Bore TGB and Coupling Type TGB-C

Model Numbering Example

New model numbering **As of April 2, 2018**

■ Single-unit type

TGB30-H-TH30JD2-N147

Series	Size	Spring strength	Shock Guard side	Bore tolerance	Bore dia. (1 mm increments)	Keyway tolerance	Set screw position (seen from adjustment nut side)	Torque range
TGB	08 12 16 20 30 50 70 90 110 130	L: Weak M: Medium H: Strong	T	F : F7 G : G7 H : H7 J : JS7 P : P7 M : M7 N : N7 K : K7 R : R7 • TGB08 to TGB16 have grade 8 tolerance.	Size Min. to max. 08 : 6 to 8 12 : 8 to 12 16 : 9 to 16 20 : 10 to 20 30 : 14 to 30 50 : 24 to 50 70 : 34 to 70 90 : 44 to 90 110 : 54 to 110 130 : 62 to 130	J: New JIS Js9 P: New JIS P9 F: Old JIS F7 E: Old JIS E9 • Old JIS keys ϕ9 or smaller are not supported.	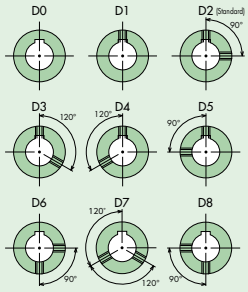 • TGB08 to TGB16 are limited to D2.	Size N·m 08 : 0.3 to 2.9 12 : 0.7 to 5.8 16 : 1.5 to 11 20 : 9.8 to 44 30 : 20 to 167 50 : 69 to 539 70 : 294 to 1080 90 : 441 to 3140 110 : 686 to 5100 130 : 1180 to 7150 • Torque less than 10 N·m is shown to one decimal place. • Specify torque range only if required.

■ Coupling type

TGB50-LC-TH35JD2XCH45ED2-N98

Series Size Spring strength	Coupling type	Shock Guard side, bore tolerance, bore dia., keyway tolerance, set screw position	Coupling side	Bore tolerance	Bore dia. (1 mm increments)	Keyway tolerance	Set screw position (seen from adjustment nut side)	Torque range
Same as single-unit type	C	Same as single-unit type TR for pilot bore	C	F : F7 G : G7 H : H7 J : JS7 P : P7 M : M7 N : N7 K : K7 R : R7	Size Min. to max. 08 : 6 to 15 12 : 8 to 20 16 : 9 to 25 20 : 14 to 42 30 : 20 to 48 50 : 20 to 55 70 : 30 to 75 90 : 35 to 103 110 : 40 to 113 130 : 55 to 145	J: New JIS Js9 P: New JIS P9 F: Old JIS F7 E: Old JIS E9 • Old JIS keys ϕ9 or smaller are not supported.	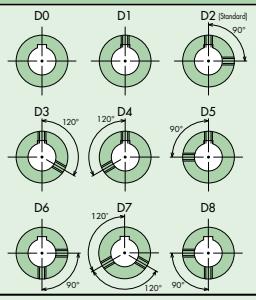	Size N·m 08 : 0.3 to 2.9 12 : 0.7 to 5.8 16 : 1.5 to 11 20 : 9.8 to 44 30 : 20 to 167 50 : 69 to 539 70 : 294 to 1080 90 : 441 to 3140 110 : 686 to 5100 130 : 1180 to 7150 • Torque less than 10 N·m is shown to one decimal place. • Specify torque range only if required.
				Pilot bore: R				

■ With sprocket

TGB50-H-08025□-TH50JD2-N294

Series	Size	Spring strength	Sprocket model no.	Sprocket installation method	Shock Guard side	Bore tolerance	Bore dia. (1 mm increments)	Keyway tolerance	Set screw position (seen from adjustment nut side)	Torque range
TGB	20 30 50 70	L: Weak M: Medium H: Strong	See page 25	A: Adapter B: Mounted externally Blank: Center sprocket	T	F : F7 G : G7 H : H7 J : JS7 P : P7 M : M7 N : N7 K : K7 R : R7	Same as single-unit type	J: New JIS Js9 P: New JIS P9 F: Old JIS F7 E: Old JIS E9	Same as single-unit type	Same as single-unit type • Specify torque range only if required.

Set Screw Position and Size

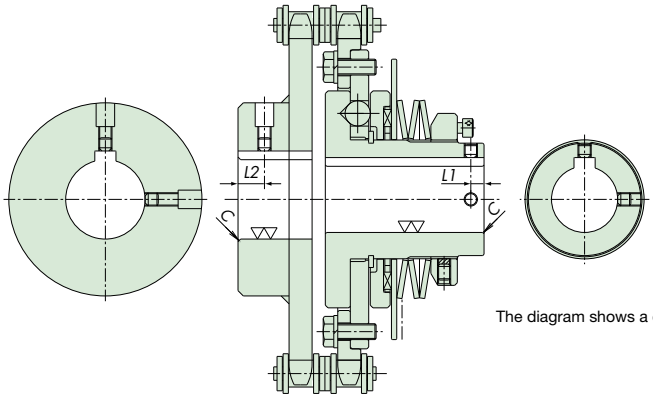

The diagram shows a coupling type model.

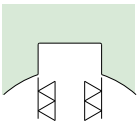

Keyway enlarged

Shock Guard TGB		Shock Guard side		Coupling side (coupling type only)	
Single-unit type model no.	Coupling type model no.	Set screw	Set screw position *(L1)*	Set screw	Set screw position *(L2)*
TGB08	**TGB08-C**	M 3× 4	36.25	M 3× 4	7
TGB12	**TGB12-C**	M 4× 6	43.5	M 4× 6	6
TGB16	**TGB16-C**	M 5× 6	52.25	M 5× 6	8
TGB20	**TGB20-C**	M 4× 4	4	M 4× 4	8
TGB30	**TGB30-C**	M 5× 5	5	M 5× 5	10
TGB50	**TGB50-C**	M 6× 6	6	M 6× 6	12
TGB70	**TGB70-C**	M 8×12	6	M 8×12	15
TGB90	**TGB90-C**	M10×10	8	M10×10	25
TGB110	**TGB110-C**	M12×12	10	M12×12	30
TGB130	**TGB130-C**	M12×12	10	M12×12	40

• Roller chain and sprocket selection

For more information on roller chain and sprocket selection and handling, refer to the *Tsubaki Drive Chains & Sprockets* catalog.

• Sprocket lubrication

· Refer to the *Tsubaki Drive Chains & Sprockets* catalog for sprocket lubrication.
· Lubricating the Shock Guard using an oil bath, rotary disc, or forced pump may cause the torque scale or model number sticker to come off.

• Use of V-belt pulleys and timing pulleys

· Confirm that the radial load caused by belt tension does not exceed the allowable load.

Bore diameter	Chamfer dimensions
ϕ 25 or less	C0.5
ϕ 50 or less	C1
ϕ 125 or less	C1.5
ϕ More than 125	C2

■ Installation Example

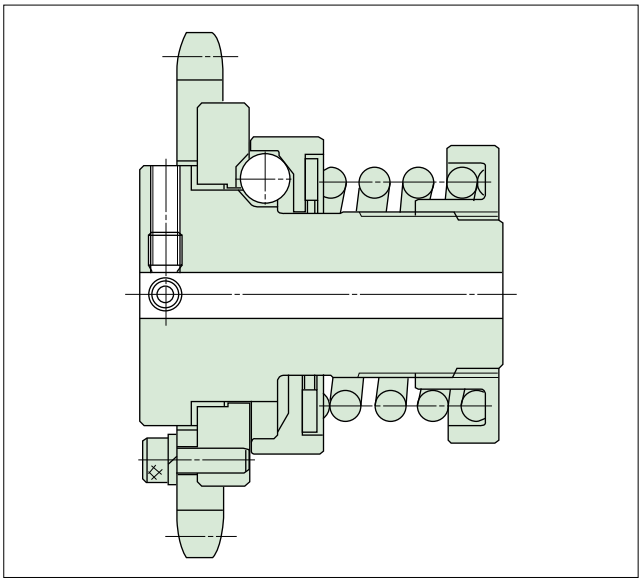

Handling

1. Setting Trip Torque

(1) All TGB Shock Guards are shipped with torque value set at the minimum. Confirm that the torque scale is set at “0.” (Refer to the diagrams for each size.)

(2) For TGB70 to TGB130, loosen the lock nuts on the three adjustment bolts. (The adjustment nuts of TGB08 to TGB50 can be turned as is.)

(3) From the Tightening Amount–Torque Correlation Charts below, find the adjustment nut’s (bolt’s) tightening angle equivalent to the predetermined trip torque. First, set at 60° toward the determined tightening value, then install onto the machine and conduct a trip test. Gradually tighten and set at the optimum trip torque. Tightening Amount–Torque Correlation Charts should be used as a rough guide only, as the trip torque may not correspond with the chart values.

(4) For TGB20 to TGB50, tighten the lock screw on the adjustment nut to prevent loosening.
For TGB70 to TGB130, tighten the hexagon nut to prevent loosening. (The adjustment nut on TGB08 to TGB16 is coated to prevent loosening.)

(5) Do not exceed the maximum torque scale value when turning the adjustment nut (bolt). Going beyond this limit will cause the disc spring to lose flexibility during trips and become stuck. (TGB08 to TGB16 use coil springs.)

2. Tightening Amount–Torque Correlation Charts

TGB08

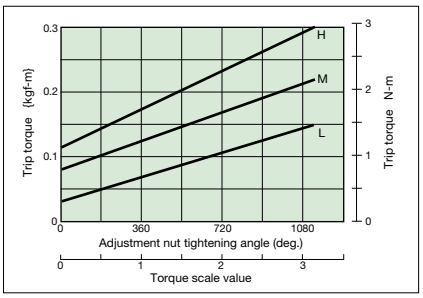

TGB12

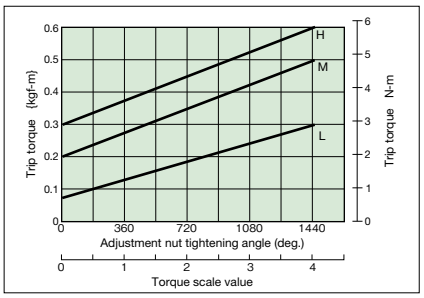

TGB16

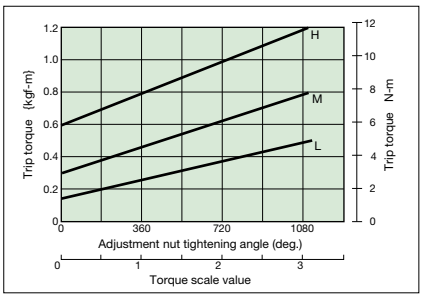

TGB20

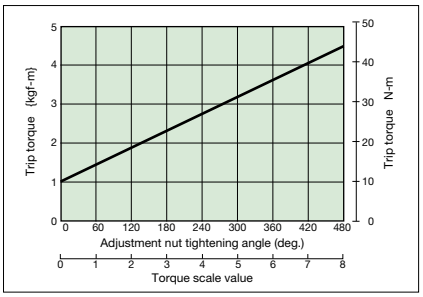

TGB30

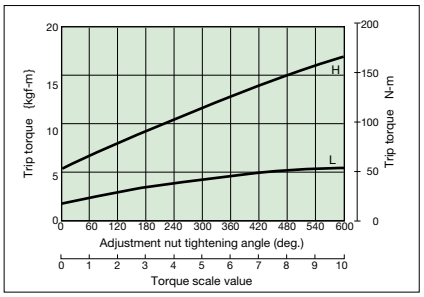

TGB50

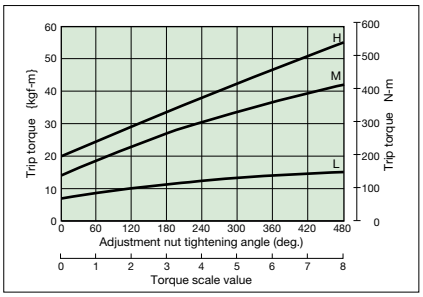

TGB70

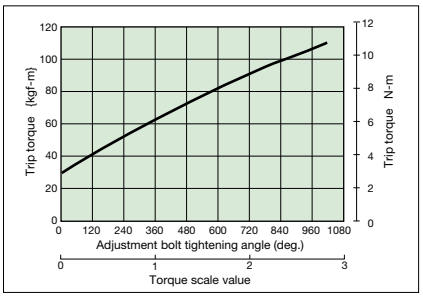

TGB90

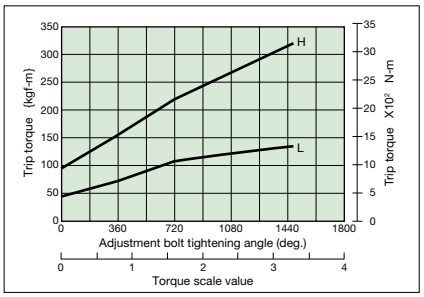

TGB110

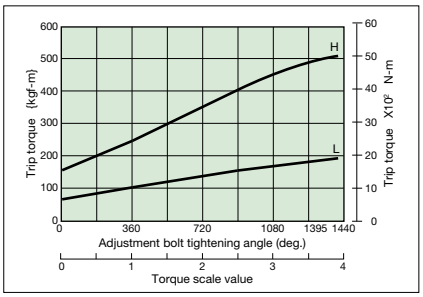

TGB130

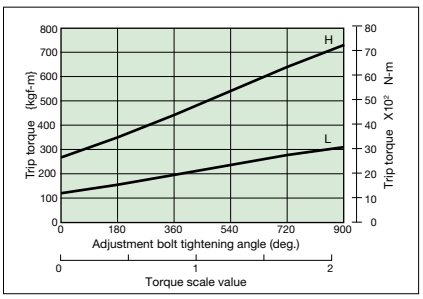

3. Bore Finishing

TGB08 to TGB16

- **The hub's material is a surface-hardened iron-based sintered alloy.**

(1) Loosen the adjustment nut to disassemble all components. Make sure not to get any dust or dirt on the components.
(2) Hold the hub flange's outer diameter with a chuck and center the hub portion. The hub's material is a surface-hardened iron-based sintered alloy, so we recommend using a carbide cutting tool (JIS 9-20, K-01).
(3) The keyway should be machined directly below the tapped hole for the set screw.
(4) After bore finishing, apply grease to the drive balls and thrust bearing before reassembling.
(5) For bore finishing, refer to the table and drawings below to create stepped bores.

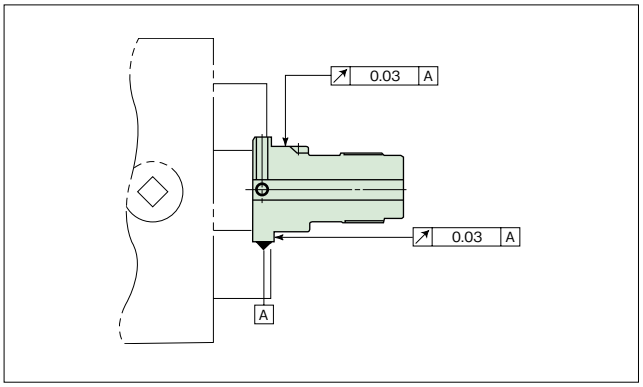

Bore Lengths

Model no.	Bore diameter (ϕd)	Bore length (L mm)	Counterbore diameter (ϕD)
TGB08 TGB08-C	ϕ6 or more; ϕ8 or less	20 mm	ϕ11
TGB12 TGB12-C	ϕ7 or more; less than ϕ10	20 mm	ϕ15
	ϕ10 or more; less than ϕ12	30 mm	
	ϕ12	Total length	Not needed
TGB16 TGB16-C	ϕ8 or more; less than ϕ10	20 mm	ϕ15
	ϕ10 or more; less than ϕ12	30 mm	
	ϕ12 or more; ϕ16 or less	Total length	Not needed

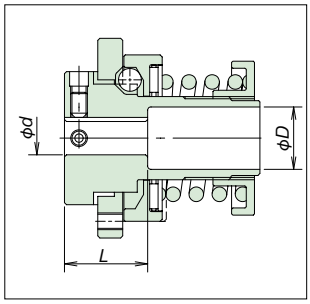

TGB08 to TGB16

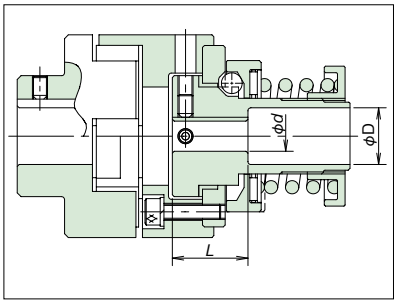

TGB08C to TGB16C

TGB20 to TGB130

- **The hub has been thermally refined.**

(1) Loosen the adjustment nut to disassemble all components. Remove the shaft's snap ring and the center flange. Make sure not to get any dust or dirt on the components.
(2) Hold the hub flange's outer diameter with a chuck and center the hub portion.
(3) Tapping for the set screws should be machined so they are spaced 90° from each other around the keyway.
(4) After bore finishing, apply grease to the drive balls and thrust bearing before reassembling.

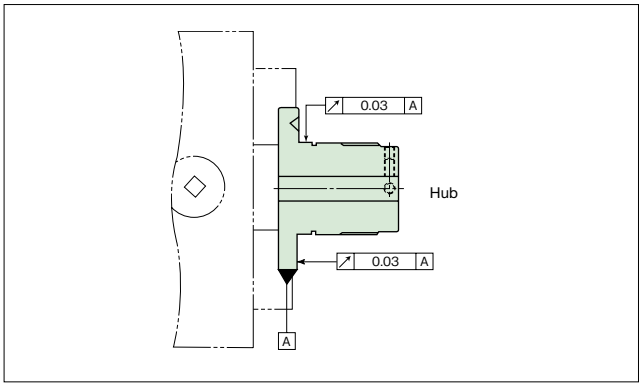

4. Resetting

Auto-resetting type only requires restarting the motor and other parts of the drive unit to reengage.

(1) When the Shock Guard trips due to overload, stop the motor and remove the cause of the overload.
(2) Reset the Shock Guard and operate at less than 50 r/min or by "jogging" the motor.
⚠ Do not manually reset the Shock Guard by turning the main unit or shaft as this can be dangerous.
(3) Clicking sounds indicate that the drive balls have rolled back into the pockets.

Selection and Manufacture of Drive Members

A sprocket, gear, or pulley can be attached to the Shock Guard as a drive member (center member).
When selecting and manufacturing a drive member, refer to the following points.

(1) Fit the drive member to the outer diameter of the center flange and secure with a bolt.
Check Shock Guard dimensions to see if the drive member can be fitted.
Each spigot joint diameter is as listed in the table below.

Unit: mm

Model no.	Spigot dia.	Model no.	Spigot dia.
TGB08-L,M,H	40 (h8)	**TGB50-L,M,H**	160 (h7)
TGB12-L,M,H	48 (h8)	**TGB70-H**	220 (h7)
TGB16-L,M,H	58 (h8)	TGB90-L,H	295 (h7)
TGB20-H	90 (h7)	TGB110-L,H	355 (h7)
TGB30-L,H	113 (h7)	TGB130-L,H	400 (h7)

(2) Installing the center flange

· **TGB08 to TGB16**
The tapped holes for installing the center flange pass through to the other side. If the bolt is longer than the center flange thickness, it will make contact with the plate. Make sure the bolts do not protrude to the plate side.

· **TGB20 to TGB130**
The tapped holes for installing the center flange pass through to the other side. If the bolt is too long, it may make contact with the sensor plate. The recommended bolt screw lengths are listed in the table below.

Unit: mm

Model no.	Bolt screw length	Model no.	Bolt screw length
TGB08-L,M,H	4	**TGB50-L,M,H**	9 to 11
TGB12-L,M,H	5	**TGB70-H**	13 to 15
TGB16-L,M,H	7	TGB90-L,H	23 to 25
TGB20-H	6 to 7	TGB110-L,H	26 to 28
TGB30-L,H	8 to 10	TGB130-L,H	28 to 30

(3) Refer to the table below for drive member bolt bore diameters (JIS B1001-1985).

• Bolt Bore Diameter JIS B1001–1985

Unit: mm

Nominal screw diameter	3	4	5	6	8	10	12	16
Bolt bore diameter	3.4	4.5	5.5	6.6	9	11	13.5	17.5

• Recommended drive member finishing dimensions

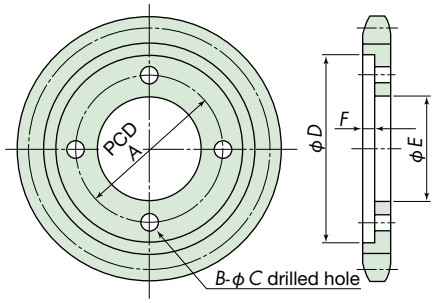

Series	Drive member finishing dimensions					
	A	*B*	*C*	*D*	E	F
TGB08-L,M,H	34	3	3.4	40_{H7}	28	3
TGB12-L,M,H	40	3	4.5	48_{H7}	33	3
TGB16-L,M,H	50	3	4.5	58_{H7}	41	3
TGB20-H	78	4	5.5	90_{H7}	64	3
TGB30-L,H	100	6	6.6	113_{H7}	84	4
TGB50-L,M,H	142	6	9.0	160_{H7}	124	5
TGB70-H	200	6	11	220_{H7}	172	5
TGB90-L,H	265	8	13.5	295_{H8}	240	5
TGB110-L,H	325	6	17.5	355_{H8}	292	5
TGB130-L,H	360	8	17.5	400_{H8}	325	5

■ Installation Examples

TGB08 to TGB16 (Externally mounted sprocket [B])

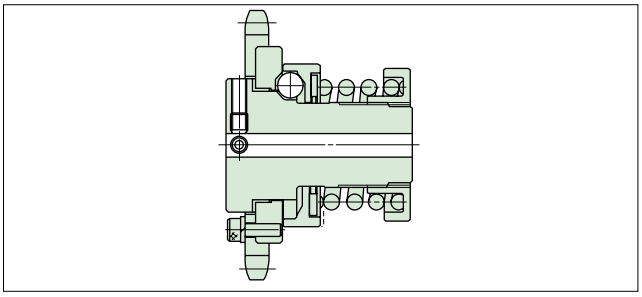

TGB20 to TGB50 (Externally mounted sprocket [B])

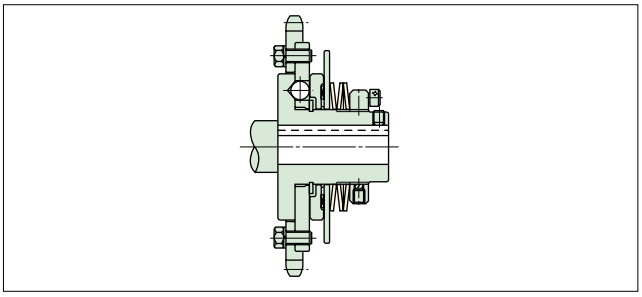

Lock Screw Tightening Torques

Hexagon socket head set screw	Tightening torque N·m{kgf·cm}
M5	3.8 { 38.7}
M8	16 {163 }

Precautions

When re-tightening lock screws that had been removed, make sure to take the following precautions:

1. Confirm that the plug tip has not been detached. If the lock screw has the plug tip detached, it may damage the hub thread or get caught in the hub notch.
2. Confirm that the plug tip has not been heavily deformed. If the lock screw has a heavily deformed plug tip, it may damage the hub thread.

If 1. or 2. is found to be the case, replace the damaged parts with new ones.

Special Specifications

1. Sprocket-integrated model

We accept orders for sprocket-integrated models, which are not included among our standard products. Select a sprocket and contact a Tsubaki representative.

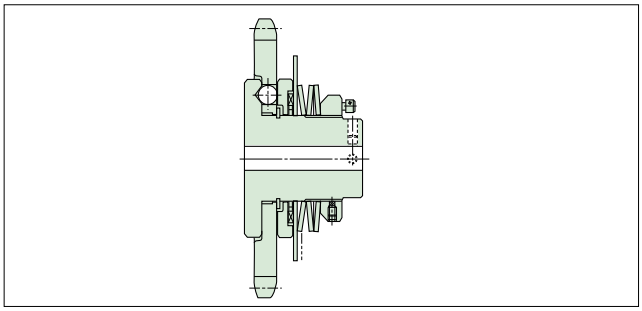

2. Adapter specifications (A)

This type is convenient for use with small-diameter sprockets and pulleys. Specify the specifications of the sprocket and pulley to be attached, and contact a Tsubaki representative.

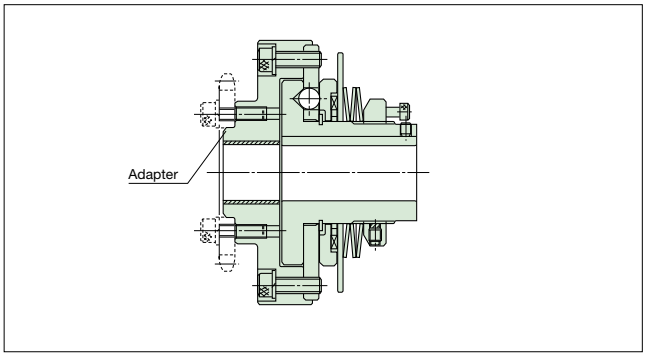

3. Forward-reverse model

The trip torque range can be changed according to the rotational direction of the Shock Guard. Contact a Tsubaki representative.

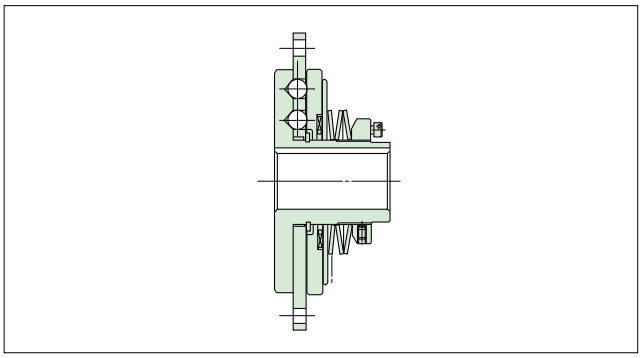

MEMO

Shock Guard TGE Series (Former MYTORQ 310 Series)

Features

Accommodates small-diameter sprockets and wide pulleys.

Easy torque adjustment

Trip torque can be freely adjusted by simply turning the adjustment nut.

One-position design

The balls and pockets, which transfer the torque, are arranged in a unique way in which they engage in only one position.

Automatic reset

After removing the cause of overload, the TGE Series automatically re-engages by rotating the drive side.

TGE	
Type 1	Accommodates small-diameter sprockets and wide pulleys.
Type 3	A general-purpose type on which Type A sprockets and pulleys can be directly mounted.

Type 1 with sprocket



Type 3



Type 3 with sprocket



Structure and Operating Principles

TGE17-1 to TGE50-1
(Type 1)

① Hub
② Drive plate
③ Adjustment nut
④ Coil spring
⑤ Drive ball
⑥ Ball bearing
⑦ Snap ring
⑧ Cover
⑨ Thrust bearing
⑩ Thrust race
⑪ Set screw
⑫ Mounting adapter
⑬ Socket bolt
⑭ Spring washer
⑮ Dry bearing

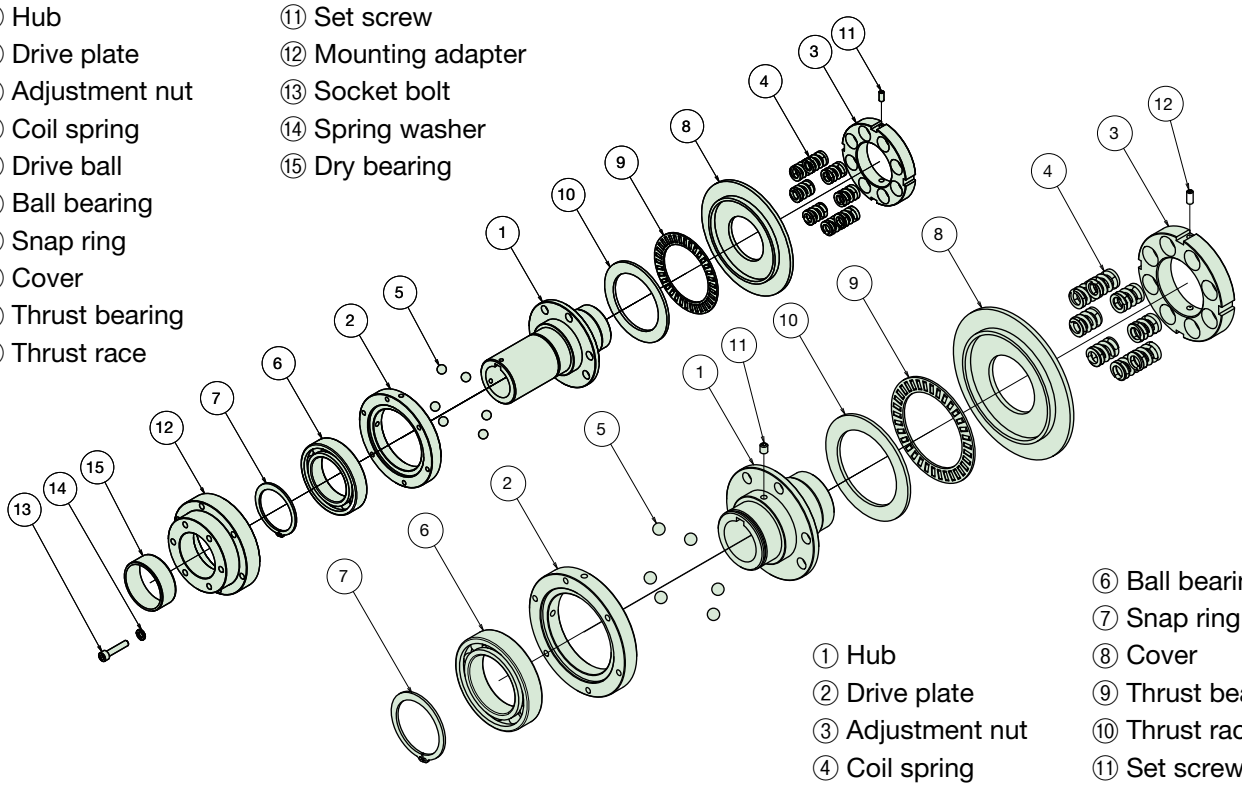

TGE17-3 to TGE50-3
(Type 3)

① Hub
② Drive plate
③ Adjustment nut
④ Coil spring
⑤ Drive ball
⑥ Ball bearing
⑦ Snap ring
⑧ Cover
⑨ Thrust bearing
⑩ Thrust race
⑪ Set screw
⑫ Set screw

TGE17 to TGE50

During normal operation (engagement)

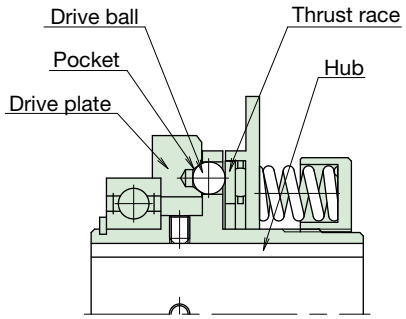

Torque is transmitted from the hub → drive balls → drive plate (or vice versa).
Sprockets and timing pulleys are bolted directly to this drive plate.
The hub flange has several holes to hold the drive balls.
There are pockets on the drive plate where the drive balls are pressured by coil springs via the thrust race to transmit the torque.

During overload (tripping)

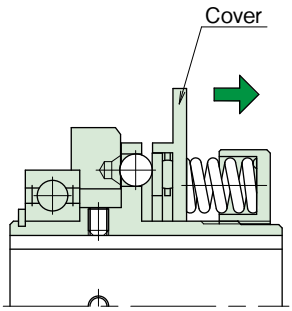

When an overload occurs, the drive balls push the thrust race toward the coil springs. The drive balls, while rotating, pop out of the pockets of the drive plate to release the driving force.
At this time, the cover moves toward the coil springs. The amount of the cover's travel is detected by a TG Sensor or a similar device. This makes it easy to automatically stop the drive source after an overload.
○ How to reset
Restarting operation after an overload allows the drive balls to automatically return to their positions within one revolution.
The TGE Series repeatedly resets if it is continuously rotated after an overload. Therefore, detect overloads using a TG Sensor or a similar device and shutdown the drive source immediately.

Transmission Capacity and Dimensions

■ TGE17-□1 to TGE50-□1 — Type 1

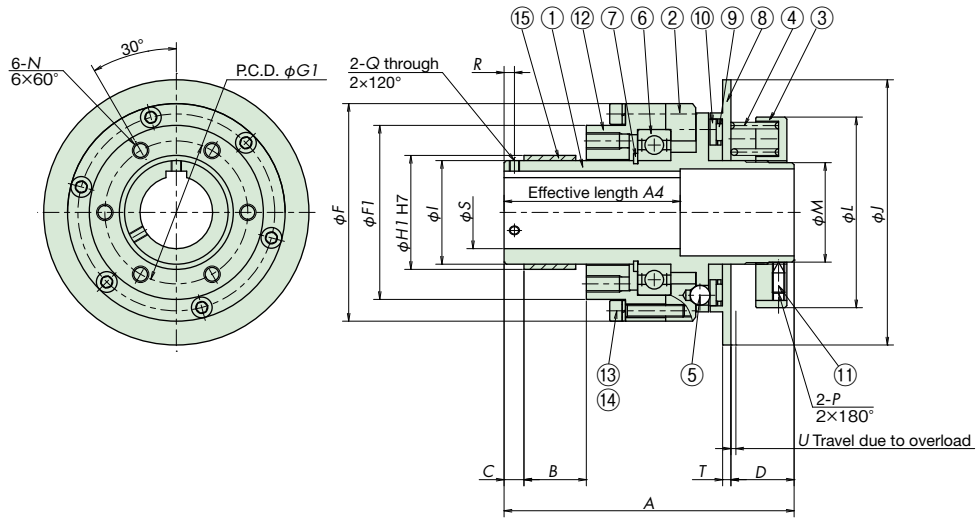

① Hub
② Drive plate
③ Adjustment nut
④ Coil spring
⑤ Drive ball
⑥ Ball bearing
⑦ Snap ring
⑧ Cover
⑨ Thrust bearing
⑩ Thrust race
⑪ Set screw
⑫ Mounting adapter
⑬ Socket bolt
⑭ Spring washer
⑮ Dry bearing

Unit: mm

Model no.	Torque range N·m	Max. rpm*1	Number of coil springs	S				A	A4*4	B	C	D	F	F1	G1 P.C.D.	H1*5
				Pilot bore dia.*2	Min. bore dia.	Max. bore dia.	Half keyway for max. bore dia.*3									
TGE17-L1	1.0 to 5.0	870	2	—	12	15	17	87	30	22.6	7.9	16.9	57	42	35	28
TGE17-M1	2.0 to 10		4													
TGE17-H1	4.0 to 20		8													
TGE25-L1	5.0 to 25	540	2	—	12	22	25	110	50	30.1	9.6	21	84	65.5	53	44
TGE25-M1	10 to 50		4													
TGE25-H1	20 to 100		8													
TGE35-L1	20 to 100	430	2	—	17	32	35	140	85	30.1	9.6	30.5	105	84	69	55
TGE35-M1	40 to 200		4													
TGE35-H1	80 to 400		8													
TGE50-L1	30 to 200	310	3	—	27	48	50	165	115	48	9.6	30.5	145	116	94	75
TGE50-M1	60 to 400		6													
TGE50-H1	120 to 700		12													

Model no.	I	J	L	M	N Screw dia. × depth	P Screw dia. × length	Q Screw dia.*6	R*6	T	U	Mass kg*7	Moment of inertia kg·m²*7	Allowable radial load N	Dry bearing
TGE17-L1	25	70	56	26	M4×8	M4×10	M4	4	2.5	1.6	0.84	0.0011	6100	#70B2520
TGE17-M1														
TGE17-H1														
TGE25-L1	40	98	70	36	M5×9	M4×10	M5	5	3	2.0	1.9	0.0021	12200	#70B4025
TGE25-M1														
TGE25-H1														
TGE35-L1	50	128	92	48	M8×16	M6×10	M5	5	4	2.4	3.5	0.0054	12200	#70B5020
TGE35-M1														
TGE35-H1														
TGE50-L1	70	168	115	68	M8×12	M6×15	M5	5	5	3.2	7.5	0.0215	34300	#70B7040
TGE50-M1														
TGE50-H1														

*1. Contact a Tsubaki representative when using at speeds higher than the maximum rpm.
*2. Only center bore processing is available.
*3. The half keyway dimension is the maximum bore diameter when the keyway depth is limited. (Refer to the table on the right.)
*4. Contact a Tsubaki representative if you need an effective keyway length longer than the *A4* dimension.
*5. The *H1* dimension is the machining dimension of the inner diameter of pulleys and sprockets. (Inner diameter finished to H7 tolerances.)
*6. Pilot-bore models do not have tapped holes for set screws. Dimensions are for reference only.
*7. Mass and moment of inertia are based on the maximum bore diameter.
Note: Contact a Tsubaki representative if you want to use the Shock Guard at a torque range lower than listed in this catalog.
When installing a pulley or sprocket, use high-tensile bolts (G10.9 or higher) and determine the length carefully so that the bolts are not buried deeper than the mounting tapped hole depth *N*.

Keyway Depth Limits

Model no.	S bore dia.	Keyway width	Keyway depth
TGE17	16 – 17	5	1.8
TGE25	24 – 25	7,8	2
TGE35	34 – 35	10	2.4
TGE50	49 – 50	12,14	2.2

Transmission Capacity and Dimensions

■ TGE17-□3 to TGE50-□3 — Type 3

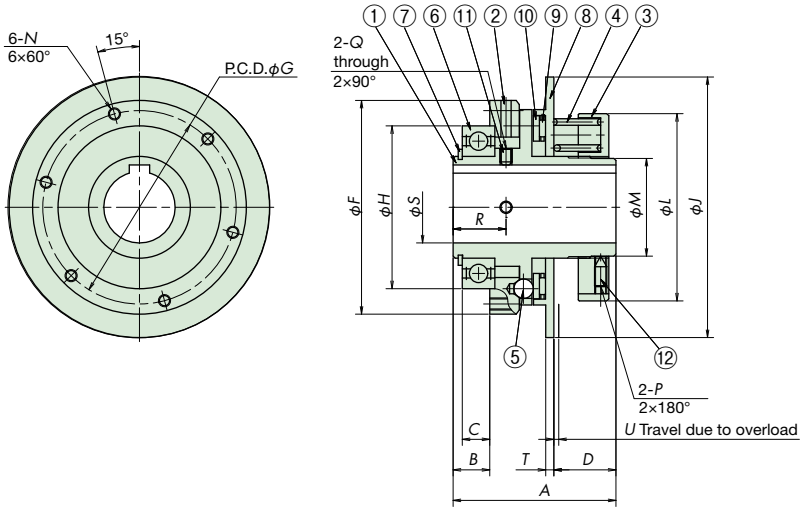

① Hub
② Drive plate
③ Adjustment nut
④ Coil spring
⑤ Drive ball
⑥ Ball bearing
⑦ Snap ring
⑧ Cover
⑨ Thrust bearing
⑩ Thrust race
⑪ Set screw
⑫ Set screw

Unit: mm

Model no.	Torque range N·m	Max. rpm*1	Number of coil springs	S						A	B	C	D	F	G P.C.D.
				Pilot bore dia.*2	Min. bore dia.	Max. bore dia.	Standard bore dia. (tolerance: H7)*3								
TGE17-L3	1.0 to 5.0	900	2	—	12	17	12	15	17	47	9	6	16.9	57	50
TGE17-M3	2.0 to 10		4												
TGE17-H3	4.0 to 20		8												
TGE25-L3	5.0 to 25	900	2	10	12	25	20	22	25	60	13	9	21	84	75
TGE25-M3	10 to 50		4												
TGE25-H3	20 to 100		8												
TGE35-L3	20 to 100	750	2	15	17	35	25	30	35	80	18	13.5	30.5	105	95
TGE35-M3	40 to 200		4												
TGE35-H3	80 to 400		8												
TGE50-L3	30 to 200	570	3	25	27	50	40	45	50	95	20	15	30.5	145	130
TGE50-M3	60 to 400		6												
TGE50-H3	120 to 700		12												

Model no.	H	J	L	M	N Screw dia. × depth	P Screw dia. × length	Q Screw dia.*4	R*4	T	U	Mass kg*5	Moment of inertia kg·m²*5	Allowable radial load N	Ball bearing
TGE17-L3	42	70	56	26	M4×8	M4×10	M4	15	2.5	1.6	0.56	0.0010	3400	#6905ZZ
TGE17-M3														
TGE17-H3														
TGE25-L3	62	98	70	36	M5×10	M4×10	M5	20	3	2.0	1.3	0.0016	7500	#6908ZZ
TGE25-M3														
TGE25-H3														
TGE35-L3	80	128	92	48	M6×14	M6×10	M6	26	4	2.4	2.6	0.0037	12400	#6010ZZ
TGE35-M3														
TGE35-H3														
TGE50-L3	110	168	115	68	M8×17	M6×15	M8	31.5	5	3.2	5.1	0.0142	23200	#6014ZZ
TGE50-M3														
TGE50-H3														

*1. Contact a Tsubaki representative when using at speeds higher than the maximum rpm.
*2. Only center bore processing is available for TGE17.
*3. The keyway dimension of a product with a standard bore complies with JIS B1301, and the keyway width tolerance is Js9.
*4. Pilot-bore models do not have tapped holes for set screws. Dimensions are for reference only.
*5. Mass and moment of inertia are based on the maximum bore diameter.

Note: Contact a Tsubaki representative if you want to use the Shock Guard at a torque range lower than listed in this catalog.
When installing a pulley or sprocket, use high-tensile bolts (G10.9 or higher) and determine the length carefully so that the bolts are not buried deeper than the mounting tapped hole depth *N*.
Products with a standard bore are delivered with a shaft-securing set screw inserted. If you will not use the set screw to secure the shaft, be sure to remove the set screw from the hub. (Screw the set screw to make it penetrate and come out of the hole).

Torque Adjustments

1. Read the nut height that corresponds to the required torque from the torque correlation charts and tighten the torque adjustment nut to that height. (Refer to the figure below.)
   To tighten the adjusting nut, loosen the set screws in two places. Then, use a hook spanner (sold separately, refer to the table at right) on the notched portion of the adjusting nut to turn it.
   Torque Correlation Charts should be used as a rough guide only, as the trip torque may not correspond with the chart values.

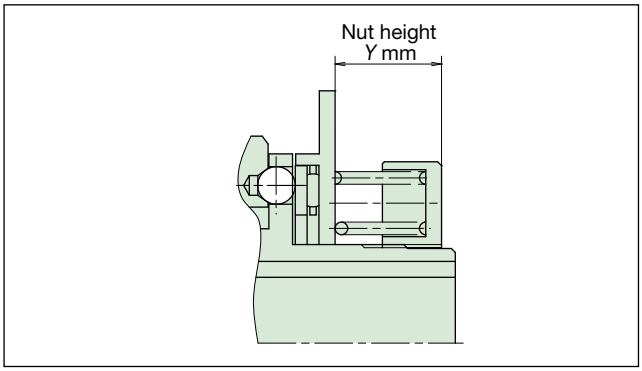

Hook Spanner

Size	TGE25	TGE35	TGE50
Wrench no.	FK-0070	FK-0092	FK-0105

2. After determining the torque value, it is recommended to write it down on the nameplate to ensure that the same torque value can be set during future overhauls. A more accurate torque adjustment can be achieved by marking matchmarks on the nut and hub edge.

Torque Correlation Charts

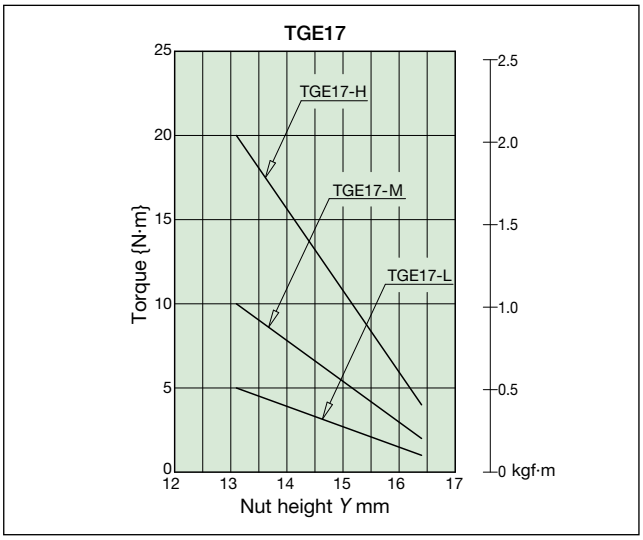

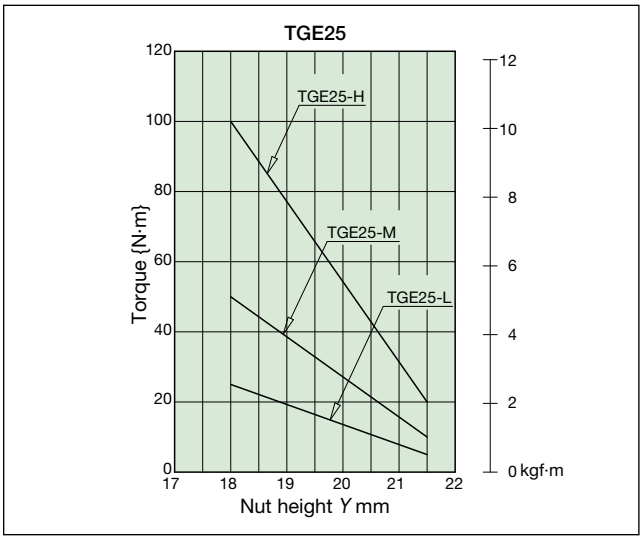

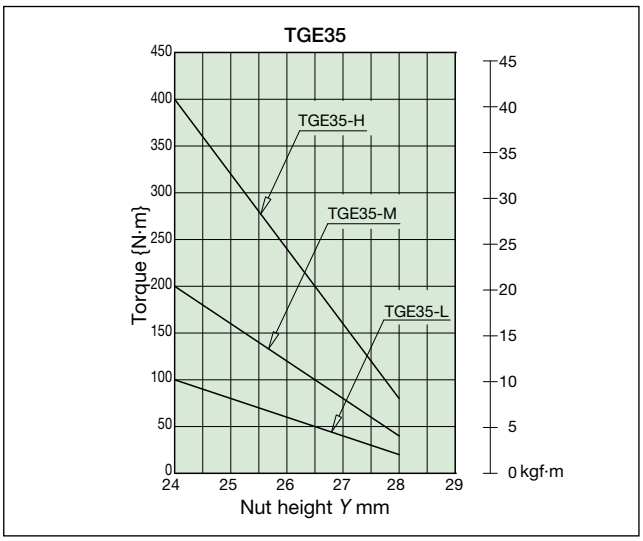

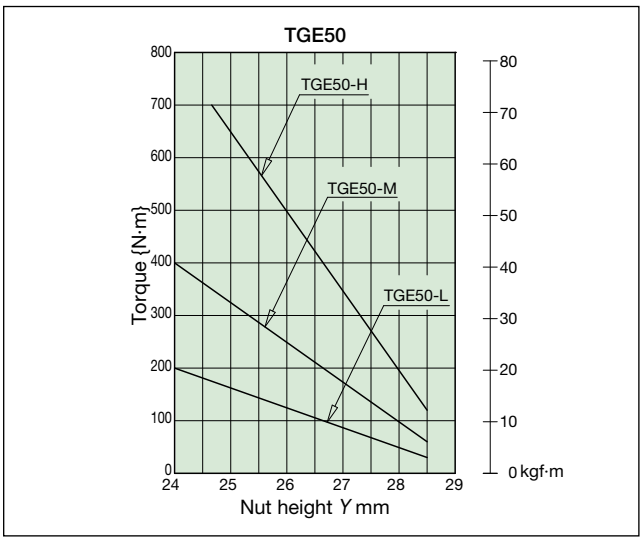

Model Numbering Example

New model numbering **As of April 2, 2018**

TGE50-M3-TH40JD2-N245

Series	Size	Spring strength	Type	Shock Guard side	Bore tolerance	Bore dia.	Keyway tolerance	Set screw position (seen from adjustment nut side)	Torque range
TGE	17 25 35 50	L: Weak M: Medium H: Strong	1: Type 1 3: Type 3	T	F: F7 G: G7 H: H7	Bore diameters are in 1 mm increments.	J: New JIS Js9 P: New JIS P9 F: Old JIS F7	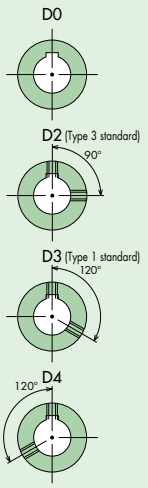 • D3 and D4 are available only for Type 1.	Shown in N·m units. • Torque less than 10 N·m is shown to one decimal place. • Specify torque range only if required.

Pilot-bore Model

TGE50-M3

Series	Size	Spring strength	Type
TGE	17 25 35 50	L: Weak M: Medium H: Strong	1: Type 1 3: Type 3

Shock Guard TGX Series

Features

No backlash and unsurpassed operation rigidity.
Ideal for machines that require accurate positioning.

Highly accurate tripping

The lost motion during trip is minimal.

Backlash-free

The innovative ball and wedge mechanism eliminates backlash.

Coupling function

For the coupling type model, the ball and wedge mechanism absorbs the misalignment in angular, parallel, and axial displacement.

Easy torque adjustment

Trip torque can be freely adjusted simply by turning the adjustment nut.

One-position design

The balls and wedge are arranged in a unique way in which they engage in only one position.





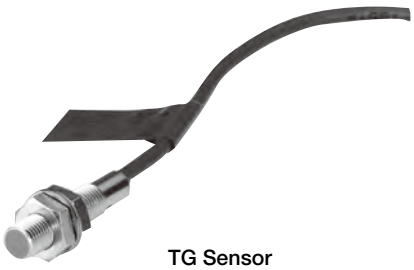

TG Sensor

Structure and Operating Principles

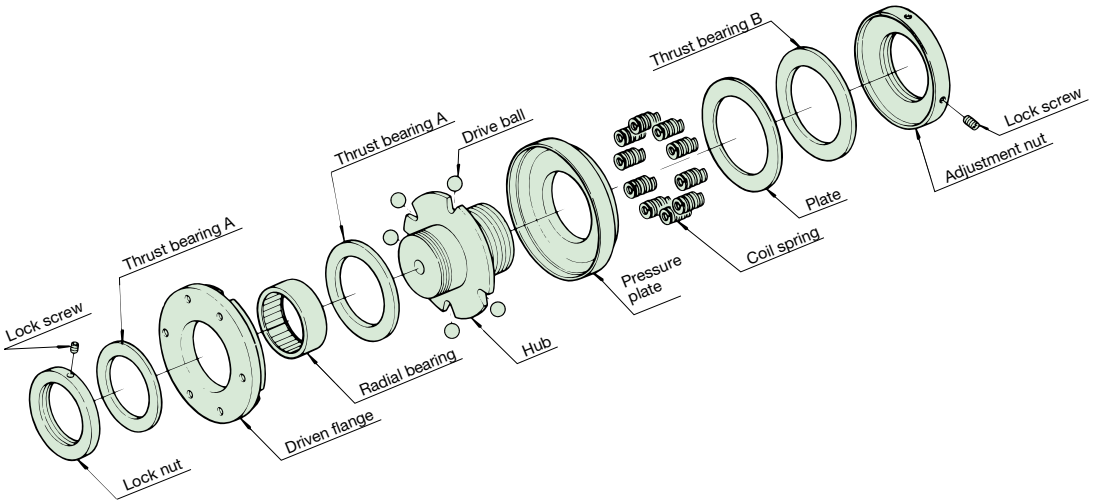

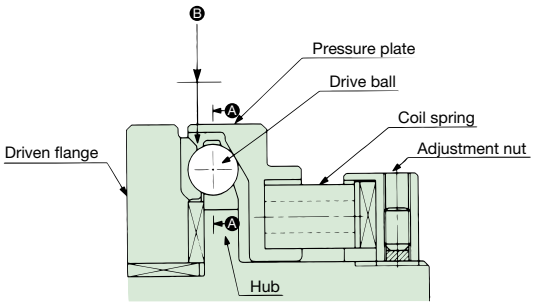

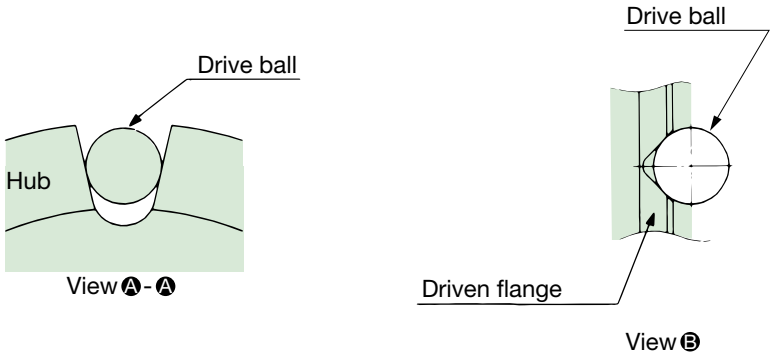

Ball and Wedge Mechanism

Torque is transmitted from the hub → drive balls → driven flange (or vice versa).
The coil spring is used to apply pressure to the drive ball to hold it against the hub and driven flange. The contact area between the pressure plate and the drive ball is tapered, to ensure that there is always zero backlash between the drive ball and the driven flange's V-shaped pocket (View Ⓐ-Ⓐ. This two-point contact of the drive ball with the driven flange's V-shaped pocket eliminates any possibility of backlash (View Ⓑ). During overload, the drive balls pop out of their pockets and start rolling. Since there is no sliding, only rolling, the friction torque at idle is extremely small. This results in a highly durable mechanism. The resetting is automatic. When the operation resumes, the drive balls return to their pockets. Similar to the TGB Series, the five drive balls and pockets are arranged asymmetrically, which allows them to engage in only one position, guaranteeing that there will be no phase misalignment.

Transmission Capacity and Dimensions

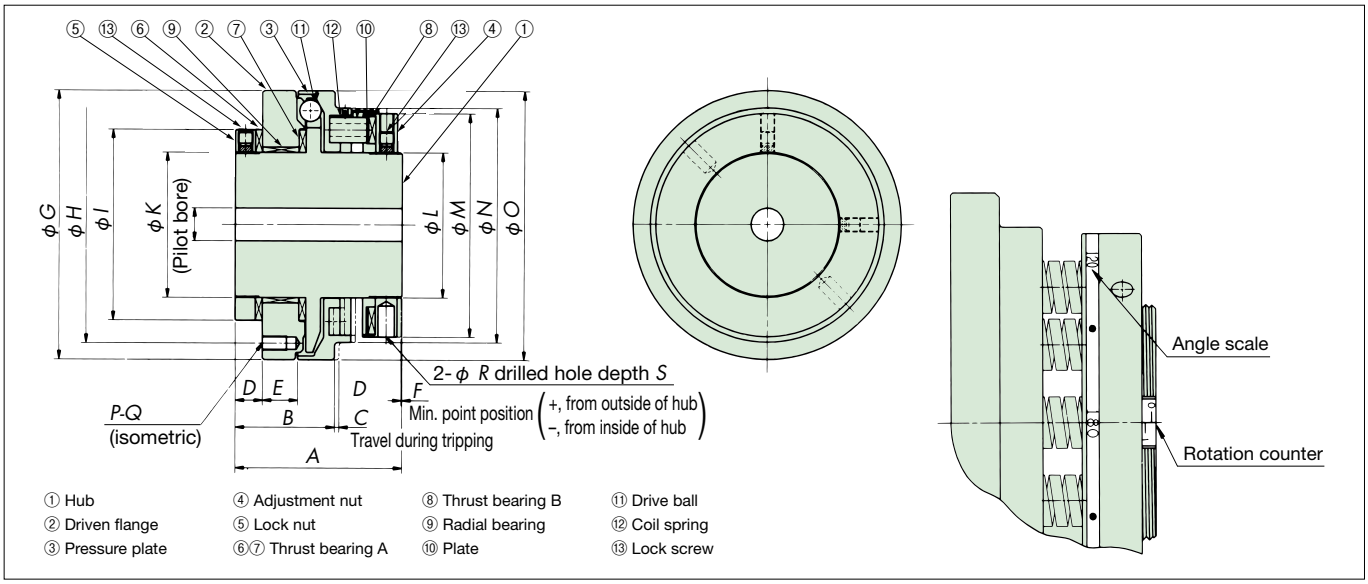

Note: 1. TGX35 consists of ⑦ thrust bearing B, ⑧ thrust bearing C, and ⑨ radial bearing.
2. TGX10 does not have ⑥⑦ thrust bearing A and ⑨ radial bearing. It consists only of the balls. (35 pieces × 2 rows)
3. One adjustment nut for fixing the lock screw is included with the Shock Guard. After setting to the optimal torque, tighten the lock screw with the following torque to avoid interference with the hub's notch. Lock screw size: TGX10 to TGX35 M5…3.8 N·m {38.7 kgf·cm} TGX50/70 M8…16 N·m {163 kgf·cm}

Unit: mm

Shock Guard model no.	Torque range N·m	Max. rpm	Coil spring color × number	Pilot bore dia.*1	Min. bore dia.	Max. bore dia.*2	*A*	*B*	*C* Travel during tripping	*D*	*E*	*F* Min. point position	*G* h7	*H* PCD	*I*
TGX10-L	1.7 to 6.4	1400	Yellow × 3	7	9	15	53	22	1.4	7.5	6.6	+ 0.3	62	54	42
TGX10-M	5.4 to 15		Red × 3												
TGX10-H	11 to 29		Red × 6												
TGX20-L	6.5 to 24	1100	Yellow × 6	8.5	10	25	64	35	1.6	10	13.4	+ 0.7	86	74	60
TGX20-M	13 to 34		Red × 3												
TGX20-H	25 to 68		Red × 6												
TGX35-L	23 to 68	800	Red × 5	12	14	35	68	37.5	2.0	11	11.6	– 0.5	107	88	70
TGX35-M	43 to 98		Green × 5												
TGX35-H	87 to 196		Green × 10												
TGX50-L	45 to 118	600	Red × 5	18	20	55	92	54.8	2.6	15	19.5	+ 0.3	148	130	105
TGX50-M	90 to 196		Green × 5												
TGX50-H	176 to 392		Green × 10												
TGX70-L	127 to 363	480	Red × 8	23	25	70	98	61	3.5	15	19.2	+ 1.0	185	164	135
TGX70-M	265 to 510		Green × 8												
TGX70-H	392 to 784		Green × 12												

Shock Guard model no.	*K* Screw dia. × pitch	*L* Screw dia. × pitch	*M*	*N*	*O*	*P*	*Q* Screw dia. × depth	*R*	*S*	Mass*3 kg	Moment of inertia*3 ×10^{-2} kg·m^2
TGX10-L	M 25×1.5	M 30×1.5	56	58	61.8	4	M 4× 6	5	10	0.75	0.0293
TGX10-M											
TGX10-H											
TGX20-L	M 40×1.5	M 40×1.5	70	73	86	6	M 5× 8	5	10	1.67	0.134
TGX20-M											
TGX20-H											
TGX35-L	M 50×1.5	M 55×1.5	88	91	107	6	M 6× 7	6	10	2.51	0.333
TGX35-M											
TGX35-H											
TGX50-L	M 80×1.5	M 80×1.5	123	129	148	6	M 8×13	9	17	7.03	1.83
TGX50-M											
TGX50-H											
TGX70-L	M100×2.0	M100×2.0	148	153	185	6	M10×13	10	18	11.4	4.88
TGX70-M											
TGX70-H											

*1. Pilot bore stock models are shown in bold, and non-bold models are made to order.
*2. Maximum bore diameter is for when a key is installed. Refer to page 46 when installing a Power-Lock.
*3. Mass and moment of inertia are based on the maximum bore diameter.

Coupling Type

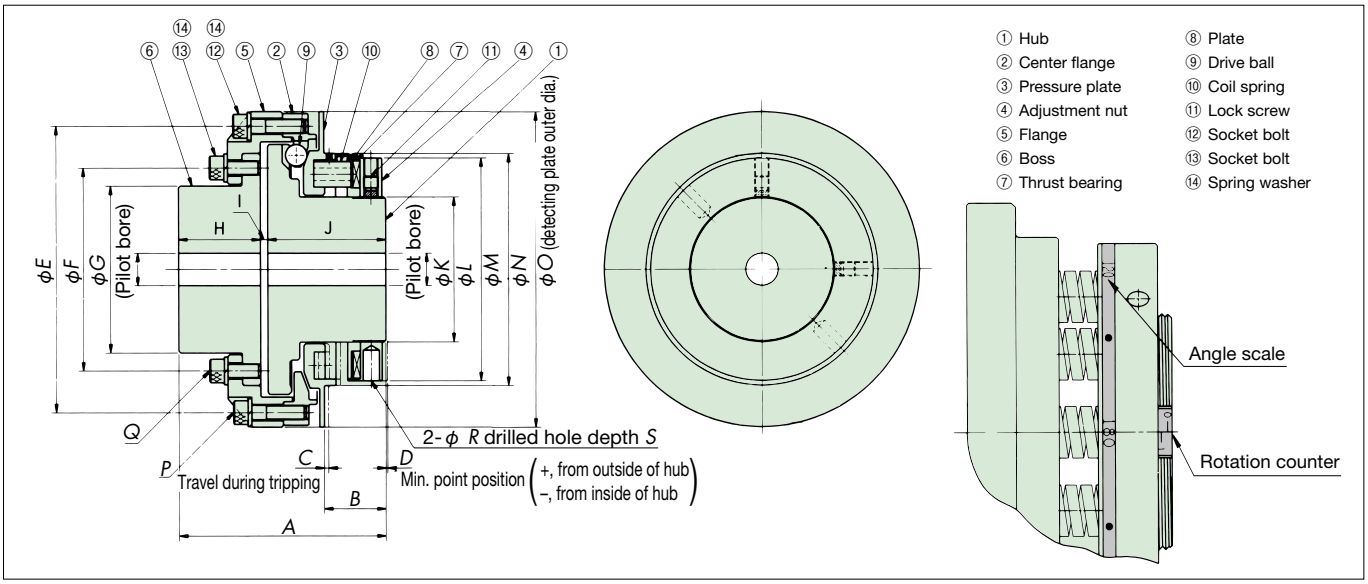

Note: One adjustment nut for fixing the lock screw is included with the Shock Guard. After setting to the optimal torque, tighten the lock screw with the following torque to avoid interference with the hub's notch. Lock screw size: TGX10 to TGX35 M5…3.8 N·m {38.7 kgf·cm} TGX50/70 M8…16 N·m {163 kgf·cm}

Unit: mm

Coupling type model no.	Torque range N·m	Max. rpm	Coil spring color × number	Shock Guard			Coupling			A	B	C	D	E	F	G	H
				Pilot bore dia.*1	Min. bore dia.	Max. bore dia.*2	Pilot bore dia.*1	Min. bore dia.	Max. bore dia.*2				Travel during tripping	PCD	PCD		
TGX10-LC	1.5 to 5.4	700	Yellow × 3	7	9	15	7	9	19	69	24	1.3	+ 0.3	62	42	33	25
TGX10-MC	4.6 to 13		Red × 3														
TGX10-HC	9.3 to 25		Red × 6														
TGX20-LC	5.2 to 19	550	Yellow × 6	8.5	10	25	8.5	10	35	84	24	1.6	+ 0.3	89	66	55	35
TGX20-MC	9.8 to 27		Red × 3														
TGX20-HC	21 to 55		Red × 6														
TGX35-LC	19 to 57	400	Red × 5	12	14	35	12	14	50	88	24	1.9	– 0.5	113	83	70	35
TGX35-MC	36 to 84		Green × 5														
TGX35-HC	74 to 167		Green × 10														
TGX50-LC	40 to 98	300	Red × 5	18	20	55	18	20	60	114	34	2.4	+ 0.9	158	112	92	45
TGX50-MC	81 to 176		Green × 5														
TGX50-HC	167 to 343		Green × 10														
TGX70-LC	118 to 323	240	Red × 8	23	25	70	23	25	80	124	36	3.3	+ 0.6	200	145	116	50
TGX70-MC	235 to 461		Green × 8														
TGX70-HC	353 to 696		Green × 12														

Coupling type model no.	I	J	K Screw dia. × pitch	L	M	N	O	P Screw dia. × length	Q Screw dia. × length	R	S	Mass*3 kg	Moment of inertia*3 ×10^{-2} kg·m^2	Allowable misalignment		
														Angular (deg.)	Parallel	Axial
TGX10-LC	2	42	M 30×1.5	56	–	74	74	M 4×18	M 4×10	5	10	1.07	0.0555	0.6	0.1	±0.5
TGX10-MC																
TGX10-HC																
TGX20-LC	3	46	M 40×1.5	70	–	98	98	M 5×20	M 5×12	5	10	2.38	0.231	0.6	0.1	±0.5
TGX20-MC																
TGX20-HC																
TGX35-LC	3	50	M 55×1.5	88	–	125	125	M 6×25	M 6×15	6	10	3.92	0.663	0.6	0.1	±0.5
TGX35-MC																
TGX35-HC																
TGX50-LC	4	65	M 80×1.5	123	128	174	174	M 8×32	M 8×20	9	17	10.9	3.35	0.6	0.1	±0.6
TGX50-MC																
TGX50-HC																
TGX70-LC	4	70	M100×2.0	148	152	218	218	M10×38	M10×22	10	18	16.3	8.93	0.6	0.1	±0.7
TGX70-MC																
TGX70-HC																

*1. Pilot bore stock models are shown in bold, and non-bold models are made to order.
*2. Maximum bore diameter is for when a key is installed. Refer to page 46 when installing a Power-Lock.
*3. Mass and moment of inertia are based on the maximum bore diameter.

Shock Guard Finished Bore TGX and Coupling Type TGX-C

New model numbering As of April 2, 2018

Model Numbering Example

■ Single-unit type

TGX35-H-TH30JD2-N147

Series	Size	Spring strength	Shock Guard side	Bore tolerance	Bore dia. (1 mm increments)	Keyway tolerance	Set screw position (seen from adjustment nut side)	Torque range
TGX	10 20 35 50 70	L: Weak M: Medium H: Strong	T	F : F7 G : G7 H : H7 J : JS7 P : P7 M : M7 N : N7 K : K7 R : R7	Size Min. to max. 10 : 9 to 15 20 : 10 to 25 35 : 14 to 35 50 : 20 to 55 70 : 25 to 70	J: New JIS Js9 P: New JIS P9 F: Old JIS F7 E: Old JIS E9 • Old JIS keys ϕ9 or smaller are not supported.	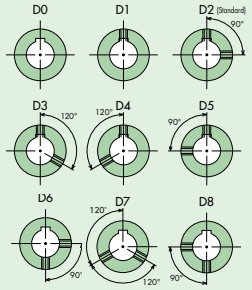	Size N·m 10 : 1.7 to 29 20 : 6.5 to 68 35 : 23 to 196 50 : 45 to 392 70 : 127 to 784 • Torque less than 10 N·m is shown to one decimal place. • Specify torque range only if required.

■ Coupling type

TGX50-LC-TH35JD2XCH45ED2-N98

Series Size Spring strength	Coupling type	Shock Guard side, bore tolerance, bore dia., set screw position	Coupling side	Bore tolerance	Bore dia. (1 mm increments)	Keyway tolerance	Set screw position (seen from hub end)	Torque range
Same as single-unit type	C	Same as single-unit type TR for pilot bore	C	F : F7 G : G7 H : H7 J : JS7 P : P7 M : M7 N : N7 K : K7 R : R7 Pilot bore: R	Size Min. to max. 10 : 9 to 19 20 : 10 to 35 35 : 14 to 50 50 : 20 to 60 70 : 25 to 80	J: New JIS Js9 P: New JIS P9 F: Old JIS F7 E: Old JIS E9 • Old JIS keys ϕ9 or smaller are not supported.	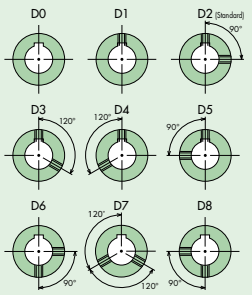	Size N·m 10 : 1.5 to 25 20 : 5.2 to 55 35 : 19 to 167 50 : 40 to 343 70 : 118 to 696 • Torque less than 10 N·m is shown to one decimal place. • Specify torque range only if required.

■ Power-Lock type

TGX50-L-T35 2

Series	Size	Coil spring strength	Shock Guard side	Bore dia.	Number of Power-Locks
TGX	10 20 35 50 70	L: Weak M: Medium H: Strong	T	Size Min. to max. 10 : 10 to 12 20 : 10 to 20 35 : 15 to 35 50 : 20 to 50 70 : 25 to 70	1: One 2: Two

Set Screw Position and Size

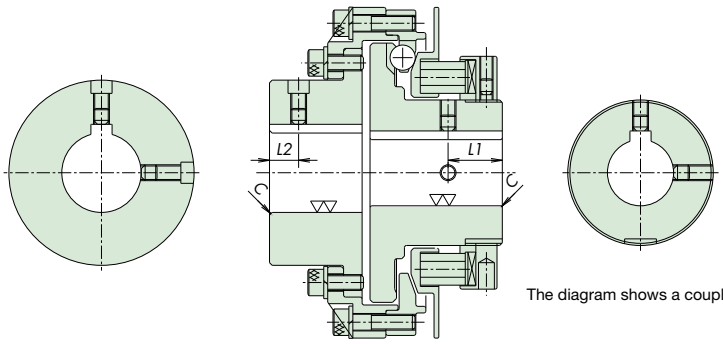

The diagram shows a coupling type model.

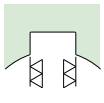

Keyway enlarged

Shock Guard TGX		Shock Guard side			Coupling side (coupling type only)		
Single-unit type model no.	Coupling type model no.	Bore dia.	Set screw	Set screw position *(L1)*	Bore dia.	Set screw	Set screw position *(L2)*
TGX10	**TGX10-C**	ϕ 15 or less	2-M4 × 4	21	ϕ 19 or less	2-M4 × 4	8
TGX20	**TGX20-C**	ϕ 23 or less	2-M5 × 5	20.5	ϕ 35 or less	2-M5 × 5	12
		ϕ 24, 25	2-M4 × 4				
TGX35	**TGX35-C**	ϕ 35 or less	2-M6 × 6	20.5	ϕ 50 or less	2-M6 × 6	11
TGX50	**TGX50-C**	ϕ 55 or less	2-M6 × 6	24.5	ϕ 60 or less	2-M6 × 6	13
TGX70	**TGX70-C**	ϕ 70 or less	2-M6 × 6	25	ϕ 80 or less	2-M6 × 6	15

Note: 1. Set screws are located at two positions, one on the keyway and the other 90° clockwise from it.
2. On the coupling-type TGX10-C, the phase of the key differs between the Shock Guard side and the coupling side.

Bore dia.	Chamfer dimensions
ϕ 25 or less	C0.5
ϕ 50 or less	C1
ϕ 125 or less	C1.5
ϕ More than 125	C2

Handling

1. Setting Trip Torque

(1) All TGX Shock Guards are shipped with torque value set at the minimum. Confirm that the Torque scale is set at "0." (Refer to pages 41 and 42.)

(2) From the Tightening Amount–Torque Correlation Charts below, find the adjustment nut's (bolt's) tightening angle equivalent to the predetermined trip torque. The torque scale is in 60° increments. First, set at 60° toward the determined tightening value, then install onto the machine and conduct a trip test. Gradually tighten and set at the optimum trip torque. Tightening Amount–Torque Correlation Charts should be used as a rough guide only, as the trip torque may not correspond with the chart values.

(3) After setting the torque, tighten the lock screw on the adjustment nut to prevent loosening.

(4) Do not exceed the maximum torque scale value when turning the adjustment nut (bolt). Going beyond this limit will cause the disc spring to lose flexibility during trips and become stuck.
Refer to page 30 for lock screw tightening torques and precautions.

2. Tightening Amount–Torque Correlation Charts

TGX10(C)

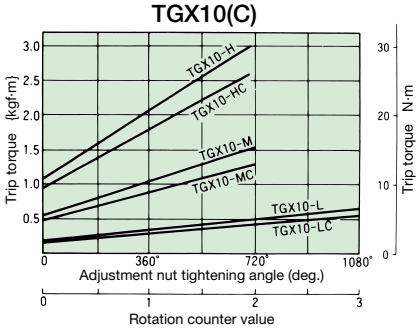

TGX20(C)

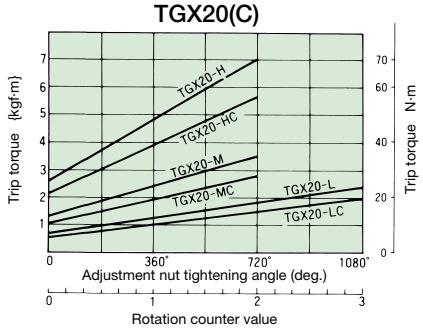

TGX35(C)

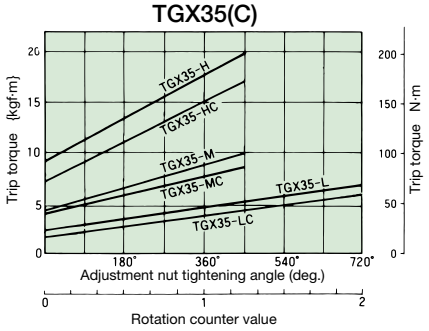

TGX50(C)

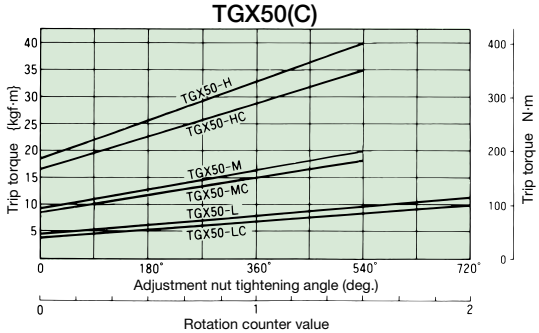

TGX70(C)

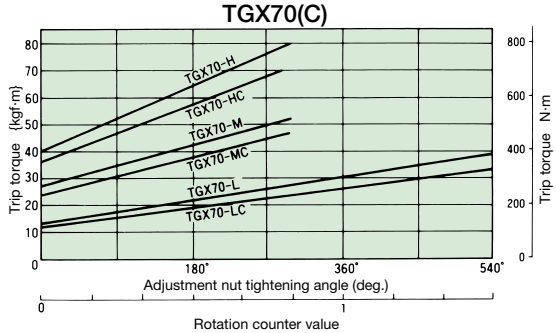

3. Centering

(1) Centering method I

a. Separate the flange from the boss and center flange.
b. Move the flange, then set to the I dimensions shown in Table 1.
c. Fix a dial gauge to the shaft and measure the runout of the hub's end face and outer circumference.

(2) Centering method II

a. Separate the flange and the center flange.
b. Fix a dial gauge to the shaft and measure the runout of the hub's end face and outer circumference.
c. Move the boss, then set to the I dimensions shown in Table 1.

Note	Be sure to secure the Shock Guard using the I dimensions in Table 1. Otherwise, it may not be possible to use the Shock Guard without any backlash.

Table 1 Unit: mm

Model no.	I dimensions
TGX10-C	2
TGX20-C	3
TGX35-C	3
TGX50-C	4
TGX70-C	4

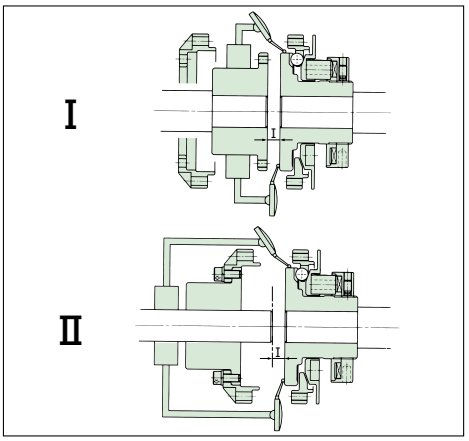

Allowable Misalignment

Unit: mm

Model no.	Allowable misalignment		
	Angular (deg.)	Parallel	Axial
TGX10-C	0.6	0.1	±0.5
TGX20-C	0.6	0.1	±0.5
TGX35-C	0.6	0.1	±0.5
TGX50-C	0.6	0.1	±0.6
TGX70-C	0.6	0.1	±0.7

Reference:
Hub end face runout per angular misalignment θ = 0.10° Unit: mm

Model no.	Outer diameter	Hub end face runout
TGX10-C	ϕ 53	0.092
TGX20-C	ϕ 75	0.131
TGX35-C	ϕ 98	0.171
TGX50-C	ϕ 138	0.241
TGX70-C	ϕ 177	0.309

Note: Make angular misalignment as small as possible when installing the Shock Guard.

4. Bore Finishing

Refer to the instruction manual for more information on the disassembly, processing, and assembly of the Shock Guard TGX and coupling-type TGX-C when performing bore finishing.

Bore Keyway Set Screw Dimensions

Model no.	Dimensions					
	A × screw dia.	*B* × screw dia.	*C* × screw dia.	*a*	*b*	*c*
TGX10	21 × M4 or less	—	—	30	—	—
TGX20	20.5 × M5 or less	—	—	40	—	—
TGX35	20.5 × M6	—	—	55	—	—
TGX50	24.5 × M6	—	—	80	—	—
TGX70	25 × M6	—	—	100	—	—
TGX10-C	—	8 × M 4 or less	21 × M4 or less	—	33	30
TGX20-C	—	12 × M 8 or less	20.5 × M5	—	55	40
TGX35-C	—	11 × M10 or less	20.5 × M6	—	70	55
TGX50-C	—	13 × M10 or less	24.5 × M6	—	92	80
TGX70-C	—	15 × M10 or less	25 × M6	—	116	100

Hold the hub's end face with a chuck, then center and finish as shown in the diagram below.

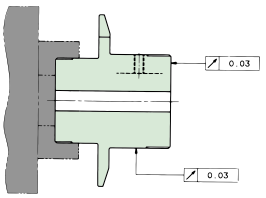

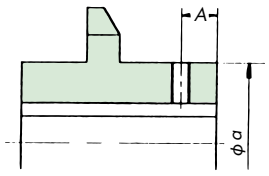

Shock Guard

Hold the boss's flange outer diameter with a chuck, then center and finish as shown in the diagram below.

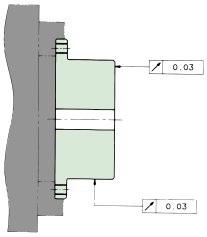

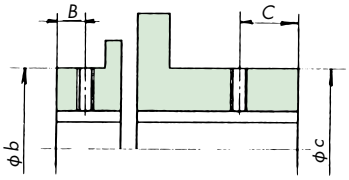

Coupling-type Shock Guard

Combination with a Power-Lock

1. Applicable Range and Transmission Torque

Both single-unit-type and coupling-type Shock Guards can be combined with the Power-Locks listed below. We can supply Power-Lock-mounted Shock Guards with custom pressure flanges and bolts upon request.
The tables show the transmission torques of a single unit of Power-Lock. When using multiple Power-Locks, multiply by the coefficient below to get the transmission torque.

N	S
2	1.55
3	1.85

N = Number of Power-Locks
S = Coefficient
Example: TGX20 bore dia. 10 mm, 2 sets of Power-Locks
1.10 × 1.55= 1.705 Approx. 17 N·m

(1) Shock Guard TGX

Adjustment nut side

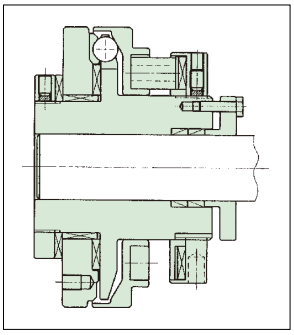

Power-Lock Transmission Torque N·m{kgf·m}

Shaft dia.	Power-Lock model no.	Shock Guard model no.				
		TGX10	TGX20	TGX35	TGX50	TGX70
		Adjustment nut side	Adjustment nut side	Adjustment nut side	Adjustment nut side	Adjustment nut side
10	PL010×013E	10.8 {1.10}	10.8 {1.10}			
12	PL012×015E	15.7 {1.60}	15.7 {1.60}			
13	PL013×016E		18.6 {1.90}			
14	PL014×018E		30.4 {3.10}			
15	PL015×019E		35.3 {3.60}	35.3 {3.60}		
16	PL016×020E		39.2 {4.00}	40.2 {4.10}		
17	PL017×021E		43.1 {4.40}	45.1 {4.60}		
18	PL018×022E		46.1 {4.70}	51.0 {5.20}		
19	PL019×024E		41.2 {4.20}	56.8 {5.80}		
20	PL020×025E		44.1 {4.50}	62.7 {6.40}	62.7 {6.40}	
22	PL022×026E			75.5 {7.70}	75.5 {7.70}	
24	PL024×028E			90.2 {9.20}	90.2 {9.20}	
25	PL025×030E			91.1 {9.30}	98.0 {10.0}	98.0 {10.0}
28	PL028×032E			111 {11.3}	123 {12.5}	123 {12.5}
30	PL030×035E			115 {11.7}	141 {14.4}	141 {14.4}
32	PL032×036E			124 {12.7}	160 {16.3}	160 {16.3}
35	PL035×040E			127 {13.0}	217 {22.1}	217 {22.1}
36	PL036×042E				229 {23.4}	229 {23.4}
38	PL038×044E				256 {26.1}	256 {26.1}
40	PL040×045E				312 {31.8}	312 {31.8}
42	PL042×048E				344 {35.1}	344 {35.1}
45	PL045×052E				366 {37.3}	490 {50.0}
48	PL048×055E				398 {40.6}	530 {54.1}
50	PL050×057E				419 {42.8}	557 {56.8}
55	PL055×062E					624 {63.7}
56	PL056×064E					590 {60.2}
60	PL060×068E					644 {65.7}
63	PL063×071E					685 {69.9}
65	PL065×073E					711 {72.6}
70	PL070×079E					724 {73.9}

Pressure Bolt Tightening Torque N·m{kgf·m}

Shaft dia.	Power-Lock model no.	Shock Guard model no.				
		TGX10	TGX20	TGX35	TGX50	TGX70
		Adjustment nut side	Adjustment nut side	Adjustment nut side	Adjustment nut side	Adjustment nut side
10	PL010×013E	2.94 {0.30}	1.96 {0.20}			
12	PL012×015E	3.14 {0.32}	2.06 {0.21}			
13	PL013×016E		2.16 {0.22}			
14	PL014×018E		3.53 {0.36}			
15	PL015×019E		3.92 {0.40}	2.94 {0.30}		
16	PL016×020E		4.02 {0.41}	3.04 {0.31}		
17	PL017×021E		4.02 {0.41}	3.14 {0.32}		
18	PL018×022E		4.02 {0.41}	3.23 {0.33}		
19	PL019×024E		4.02 {0.41}	3.63 {0.37}		
20	PL020×025E		4.02 {0.41}	3.72 {0.38}	5.49 {0.56}	
22	PL022×026E			3.72 {0.38}	5.59 {0.57}	
24	PL024×028E			3.92 {0.40}	5.59 {0.57}	
25	PL025×030E			4.02 {0.41}	6.27 {0.64}	5.00 {0.51}
28	PL028×032E			4.02 {0.41}	6.47 {0.66}	5.19 {0.53}
30	PL030×035E			4.02 {0.41}	7.06 {0.72}	5.59 {0.57}
32	PL032×036E			4.02 {0.41}	7.35 {0.75}	5.88 {0.60}
35	PL035×040E			4.02 {0.41}	9.11 {0.93}	7.25 {0.74}
36	PL036×042E				9.51 {0.97}	7.64 {0.78}
38	PL038×044E				9.90 {1.01}	7.94 {0.81}
40	PL040×045E				11.7 {1.19}	9.31 {0.95}
42	PL042×048E				12.3 {1.26}	9.80 {1.00}
45	PL045×052E				13.7 {1.40}	13.7 {1.40}
48	PL048×055E				13.7 {1.40}	13.7 {1.40}
50	PL050×057E				13.7 {1.40}	13.7 {1.40}
55	PL055×062E					13.7 {1.40}
56	PL056×064E					13.7 {1.40}
60	PL060×068E					13.7 {1.40}
63	PL063×071E					13.7 {1.40}
65	PL065×073E					13.7 {1.40}
70	PL070×079E					13.7 {1.40}

(2) Coupling Type TGX-C

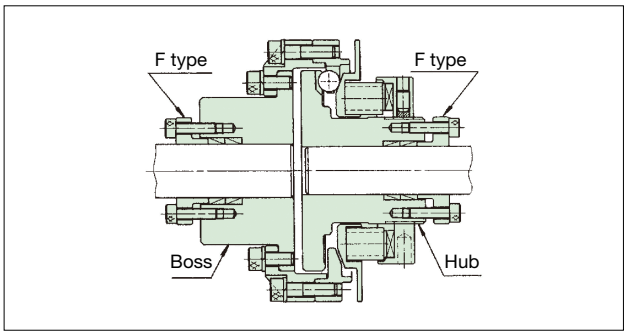

Power-Lock Transmission Torque

N·m{kgf·m}

Shaft dia.	Power-Lock model no.	Shock Guard model no.									
		TGX10-C		TGX20-C		TGX35-C		TGX50-C		TGX70-C	
		Shock Guard side	Coupling side	Shock Guard side	Coupling side	Shock Guard side	Coupling side	Shock Guard side	Coupling side	Shock Guard side	Coupling side
10	PL010×013E	10.8 {1.10}	10.8 {1.10}	10.8 {1.10}	10.8 {1.10}						
12	PL012×015E	15.7 {1.60}	15.7 {1.60}	15.7 {1.60}	15.7 {1.60}						
13	PL013×016E			18.6 {1.90}	18.6 {1.90}						
14	PL014×018E			30.4 {3.10}	30.4 {3.10}						
15	PL015×019E			35.3 {3.60}	35.3 {3.60}	35.3 {3.60}	35.3 {3.60}				
16	PL016×020E			39.2 {4.00}	39.2 {4.00}	40.2 {4.10}	40.2 {4.10}				
17	PL017×021E			43.1 {4.40}	43.1 {4.40}	45.1 {4.60}	45.1 {4.60}				
18	PL018×022E			46.1 {4.70}	46.1 {4.70}	51.0 {5.20}	51.0 {5.20}				
19	PL019×024E			41.2 {4.20}	41.2 {4.20}	56.8 {5.80}	56.8 {5.80}				
20	PL020×025E			44.1 {4.50}	44.1 {4.50}	62.7 {6.40}	62.7 {6.40}	62.7 {6.40}	62.7 {6.40}		
22	PL022×026E					75.5 {7.70}	75.5 {7.70}	75.5 {7.70}	75.5 {7.70}		
24	PL024×028E					90.2 {9.20}	90.2 {9.20}	90.2 {9.20}	90.2 {9.20}		
25	PL025×030E					91.1 {9.30}	91.1 {9.30}	98.0 {10.0}	98.0 {10.0}	98.0 {10.0}	98.0 {10.0}
28	PL028×032E					111 {11.3}	111 {11.3}	123 {12.5}	123 {12.5}	123 {12.5}	123 {12.5}
30	PL030×035E					115 {11.7}	115 {11.7}	141 {14.4}	141 {14.4}	141 {14.4}	141 {14.4}
32	PL032×036E					124 {12.7}	124 {12.7}	160 {16.3}	160 {16.3}	160 {16.3}	160 {16.3}
35	PL035×040E					127 {13.0}	127 {13.0}	217 {22.1}	217 {22.1}	217 {22.1}	217 {22.1}
36	PL036×042E							229 {23.4}	229 {23.4}	229 {23.4}	229 {23.4}
38	PL038×044E							256 {26.1}	256 {26.1}	256 {26.1}	256 {26.1}
40	PL040×045E							312 {31.8}	312 {31.8}	312 {31.8}	312 {31.8}
42	PL042×048E							344 {35.1}	344 {35.1}	344 {35.1}	344 {35.1}
45	PL045×052E							366 {37.3}	366 {37.3}	490 {50.0}	490 {50.0}
48	PL048×055E							398 {40.6}	398 {40.6}	530 {54.1}	530 {54.1}
50	PL050×057E							419 {42.8}	419 {42.8}	557 {56.8}	557 {56.8}
55	PL055×062E									624 {63.7}	624 {63.7}
56	PL056×064E									590 {60.2}	590 {60.2}
60	PL060×068E									644 {65.7}	644 {65.7}
63	PL063×071E									685 {69.9}	685 {69.9}
65	PL065×073E									711 {72.6}	711 {72.6}
70	PL070×079E									724 {73.9}	724 {73.9}

Pressure Bolt Tightening Torque

N·m{kgf·m}

Shaft dia.	Power-Lock model no.	Shock Guard model no.									
		TGX10-C		TGX20-C		TGX35-C		TGX50-C		TGX70-C	
		Shock Guard side	Coupling side	Shock Guard side	Coupling side	Shock Guard side	Coupling side	Shock Guard side	Coupling side	Shock Guard side	Coupling side
10	PL010×013E	2.94 {0.30}	2.94 {0.30}	1.96 {0.20}	1.96 {0.20}						
12	PL012×015E	3.14 {0.32}	3.14 {0.32}	2.06 {0.21}	2.06 {0.21}						
13	PL013×016E			2.16 {0.22}	2.16 {0.22}						
14	PL014×018E			3.53 {0.36}	3.53 {0.36}						
15	PL015×019E			3.92 {0.40}	3.92 {0.40}	2.94 {0.30}	2.94 {0.30}				
16	PL016×020E			4.02 {0.41}	4.02 {0.41}	3.04 {0.31}	3.04 {0.31}				
17	PL017×021E			4.02 {0.41}	4.02 {0.41}	3.14 {0.32}	3.14 {0.32}				
18	PL018×022E			4.02 {0.41}	4.02 {0.41}	3.23 {0.33}	3.23 {0.33}				
19	PL019×024E			4.02 {0.41}	4.02 {0.41}	3.63 {0.37}	3.63 {0.37}				
20	PL020×025E			4.02 {0.41}	4.02 {0.41}	3.72 {0.38}	3.72 {0.38}	5.49 {0.56}	5.49 {0.56}		
22	PL022×026E					3.72 {0.38}	3.72 {0.38}	5.59 {0.57}	5.59 {0.57}		
24	PL024×028E					3.92 {0.40}	3.92 {0.40}	5.59 {0.57}	5.59 {0.57}		
25	PL025×030E					4.02 {0.41}	4.02 {0.41}	6.27 {0.64}	6.27 {0.64}	5.00 {0.51}	5.00 {0.51}
28	PL028×032E					4.02 {0.41}	4.02 {0.41}	6.47 {0.66}	6.47 {0.66}	5.19 {0.53}	5.19 {0.53}
30	PL030×035E					4.02 {0.41}	4.02 {0.41}	7.06 {0.72}	7.06 {0.72}	5.59 {0.57}	5.59 {0.57}
32	PL032×036E					4.02 {0.41}	4.02 {0.41}	7.35 {0.75}	7.35 {0.75}	5.88 {0.60}	5.88 {0.60}
35	PL035×040E					4.02 {0.41}	4.02 {0.41}	9.11 {0.93}	9.11 {0.93}	7.25 {0.74}	7.25 {0.74}
36	PL036×042E							9.51 {0.97}	9.51 {0.97}	7.64 {0.78}	7.64 {0.78}
38	PL038×044E							9.90 {1.01}	9.90 {1.01}	7.94 {0.81}	7.94 {0.81}
40	PL040×045E							11.7 {1.19}	11.7 {1.19}	9.31 {0.95}	9.31 {0.95}
42	PL042×048E							12.3 {1.26}	12.3 {1.26}	9.80 {1.00}	9.80 {1.00}
45	PL045×052E							13.7 {1.40}	13.7 {1.40}	13.7 {1.40}	13.7 {1.40}
48	PL048×055E							13.7 {1.40}	13.7 {1.40}	13.7 {1.40}	13.7 {1.40}
50	PL050×057E							13.7 {1.40}	13.7 {1.40}	13.7 {1.40}	13.7 {1.40}
55	PL055×062E									13.7 {1.40}	13.7 {1.40}
56	PL056×064E									13.7 {1.40}	13.7 {1.40}
60	PL060×068E									13.7 {1.40}	13.7 {1.40}
63	PL063×071E									13.7 {1.40}	13.7 {1.40}
65	PL065×073E									13.7 {1.40}	13.7 {1.40}
70	PL070×079E									13.7 {1.40}	13.7 {1.40}

2. Pilot Bore Pressure Flange

Custom pressure flanges and pressure bolts are made to order upon request. Pressure bolts are JIS strength class 10.9. The pressure flange is mounted at the end face of the hub or boss using tapped holes. Refer to page 48 for the recommended finishing dimensions.

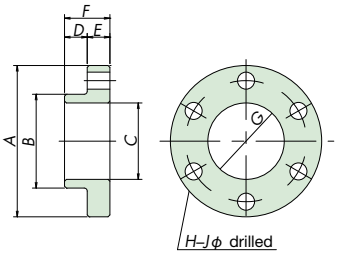

Pilot Bore Pressure Flange Dimensions

Unit: mm

Pressure flange model no.	A	Pilot bore dimensions B	Pilot bore dimensions C	D	E	F	G PCD	H	J	Mass*1 kg	Moment of inertia kg·m²	GD²*2 kgf·m²	Pressure bolt size × quantity		Tapped side screw effective depth
TGX10-F	30	14.9	10.1	5	6	11	22	4	4.5	0.037	0.043	0.173	M4×14ℓ	4	M4× 8ℓ
TGX20-F	40	24.8	10.1	6	6	12	32	6	4.5	0.080	0.150	0.600	M4×14ℓ	6	M4× 8ℓ
TGX35-F	55	39.8	15.1	6	6	12	47	8	4.5	0.16	0.598	2.39	M4×14ℓ	8	M4× 8ℓ
TGX50-F	81	56.8	20.2	7	10	17	69	8	6.6	0.53	4.240	16.96	M6×22ℓ	8	M6×12ℓ
TGX70-F	101	78.7	25.2	7	10	17	89	10	6.6	0.87	10.83	43.33	M6×22ℓ	10	M6×12ℓ

*1/*2 Mass and GD² are for a single set that includes a pressure flange (max. bore diameter) and pressure bolts.
Note: All products are MTO.

3. Pressure Flange Recommended Finishing Dimensions

(1) Centering
Hold the flange's outer diameter with a chuck and center the flange. (Refer to the diagram on the right.)

(2) Recommended dimensions
According to the Power-Lock size, choose the finishing dimensions from the table below.

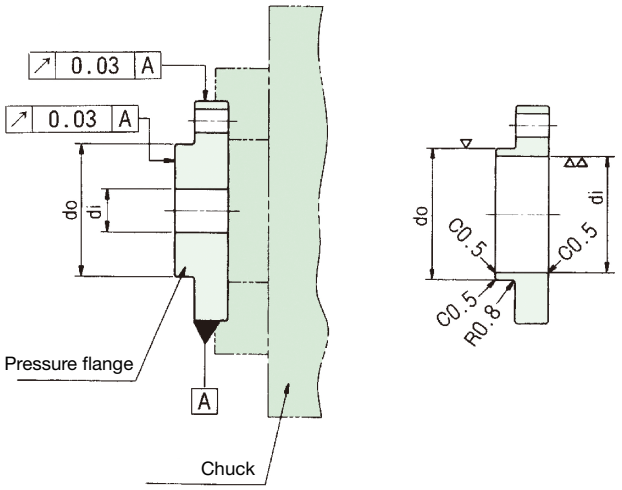

Pressure Flange Centering and Processing

Unit: mm

Bore dia. (mm)	Power-Lock model no.	TGX10(C) F		TGX20(C) F		TGX35(C) F		TGX50(C) F		TGX70(C) F	
		$do_{-0.1}^{0}$	$di\ ^{+0.1}_{-0}$	$do_{-0.1}^{0}$	$di\ ^{+0.1}_{-0}$	$do_{-0.1}^{0}$	$di\ ^{+0.1}_{-0}$	$do_{-0.1}^{0}$	$di\ ^{+0.1}_{-0}$	$do_{-0.1}^{0}$	$di\ ^{+0.1}_{-0}$
10	PL010×013E	12.9	10.1	12.9	10.1						
12	PL012×015E	14.9	12.1	14.9	12.1						
13	PL013×016E			15.9	13.1						
14	PL014×018E			17.9	14.1						
15	PL015×019E			18.9	15.1	18.9	15.1				
16	PL016×020E			19.9	16.1	19.9	16.1				
17	PL017×021E			20.9	17.1	20.9	17.1				
18	PL018×022E			21.9	18.1	21.9	18.1				
19	PL019×024E			23.8	19.2	23.8	19.2				
20	PL020×025E			24.8	20.2	24.8	20.2	24.8	20.2		
22	PL022×026E					25.8	22.2	25.8	22.2		
24	PL024×028E					27.8	24.2	27.8	24.2		
25	PL025×030E					29.8	25.2	29.8	25.2	29.8	25.2
28	PL028×032E					31.8	28.2	31.8	28.2	31.8	28.2
30	PL030×035E					34.8	30.2	34.8	30.2	34.8	30.2
32	PL032×036E					35.8	32.2	35.8	32.2	35.8	32.2
35	PL035×040E					39.8	35.2	39.8	35.2	39.8	35.2
36	PL036×042E							41.8	36.2	41.8	36.2
38	PL038×044E							43.8	38.2	43.8	38.2
40	PL040×045E							44.8	40.2	44.8	40.2
42	PL042×048E							47.8	42.2	47.8	42.2
45	PL045×052E							51.8	45.2	51.8	45.2
48	PL048×055E							54.8	48.2	54.8	48.2
50	PL050×057E							56.8	50.2	56.8	50.2
55	PL055×062E									61.8	55.2
56	PL056×064E									63.8	56.2
60	PL060×068E									67.8	60.2
63	PL063×071E									70.8	63.2
65	PL065×073E									72.8	65.2
70	PL070×079E									78.7	70.3

Note: Refer to the instruction manual for hub bore finishing when mounting a Power-Lock.

Shock Guard TGF Series (Former MYTORQ 300 Series)

Features

The mounting surface accuracy of the output flange is excellent, making it ideal for direct mounting to indexing tables.



High accuracy

Minimal backlash and excellent resetting accuracy make it ideal for indexers.

Easy torque adjustment

The torque scale allows easy torque adjustments.
(See page 59.)

Automatic reset

After removing the cause of overload, the TGF Series automatically re-engages by rotating the drive side.

One-position design

The balls and pockets, which transfer the torque, are arranged in a unique way in which they engage in only one position.

TGF	
Type 2	A timing pulley can be directly mounted. The shaft-securing set screw can be tightened from the outside.
Type 3	Thinner than Type 2 and ideal for mounting a Power-Lock.
Type 5	The Echt-Flex coupling provides an angular tolerance. Parallelism errors are not allowed.
Type 7	The Echt-Flex coupling provides angular and parallelism tolerances.

Structure and Operating Principles

TGF20 to TGF45

① Hub
② End nut
③ Set screw
④ Drive plate
⑤ Slide plate
⑥ Adjustment nut
⑦ Coil spring
⑧ Drive ball (steel ball A)
⑨ Snap ring
⑩ Set screw
⑪ Steel ball B
⑫ Steel ball C
⑬ Housing
⑭ Thrust bearing
⑮ Set screw

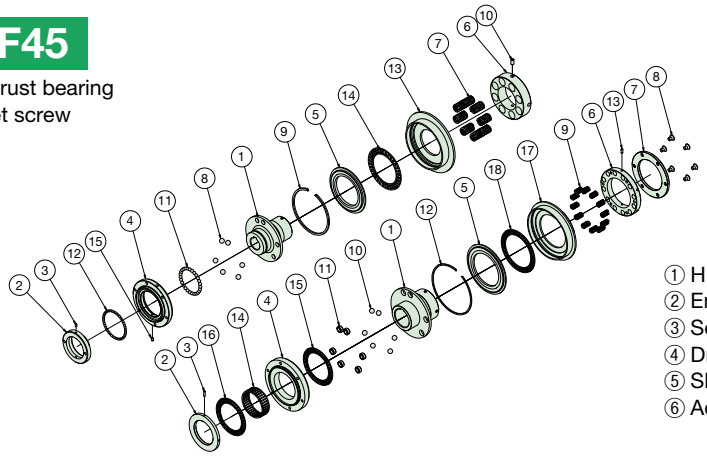

TGF65 to TGF90

① Hub
② End nut
③ Set screw
④ Drive plate
⑤ Slide plate
⑥ Adjustment nut
⑦ Spring holder
⑧ Bolt
⑨ Coil spring
⑩ Drive ball (steel ball A)
⑪ Bush (TGF65 only)
⑫ Snap ring
⑬ Set screw
⑭ Radial bearing
⑮ Thrust bearing A
⑯ Thrust bearing A
⑰ Housing
⑱ Thrust bearing B

TGF20 to TGF45

The principle of operation is the same for TGF65 and TGF90.

During normal operation (engagement)

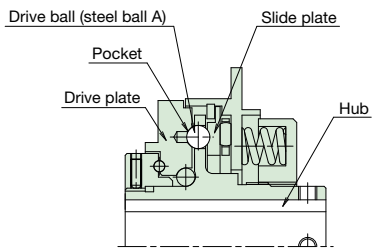

Torque is transmitted from the hub → drive ball → drive plate (or vice versa).
Sprockets and timing pulleys are bolted directly to this drive plate.
The hub flange has several holes to hold the drive balls.
There are pockets on the drive plate where the drive balls are pressured by coil springs via the slide plate to transmit the torque.

During overload (tripping)

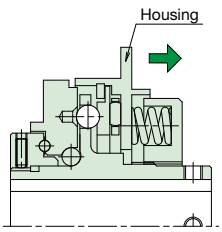

When an overload occurs, the drive balls push the slide plate toward the coil springs. The drive balls, while rotating, pop out of the pockets of the drive plate to release the driving force.
At this time, the housing moves toward the coil springs. The amount of the housing's travel is detected by a TG Sensor or a similar device. This makes it easy to automatically stop the drive source after an overload.
● How to reset
Restarting operation after an overload allows the drive balls to automatically return to their positions within one revolution.
The TGF Series repeatedly resets if it is continuously rotated after an overload. Therefore, detect overloads using a TG Sensor or a similar device and shutdown the drive source immediately.

Model Numbering Example

New model numbering As of April 2, 2018

■ Single-unit type

TGF20-L2-TH20JD2-N19

Series	Size	Spring strength	Type	Shock Guard side	Bore tolerance	Bore dia.	Keyway tolerance	Set screw position (seen from adjustment nut side)	Torque range
TGF	20 30 45 65 90	L: Weak M: Medium H: Strong	2: Type 2 3: Type 3	T	F : F7 G : G7 H : H7	Bore diameters are in 1 mm increments.	J: New JIS Js9 P: New JIS P9 F: Old JIS F7	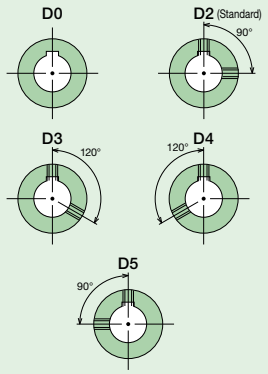	Shown in N·m units. • Torque less than 10 N·m is shown to one decimal place. • Specify torque range only if required.

■ Coupling type

TGF20-L5-TH20PD2XCH30PD2-N18

Series	Size	Spring strength	Type	Shock Guard side	Bore tolerance, bore dia., keyway tolerance, set screw position (seen from adjustment nut side)	Coupling side	Bore tolerance, bore dia., keyway tolerance, set screw position (seen from coupling hub end)	Torque range
TGF	20 30 45 65 90	L: Weak M: Medium H: Strong	5: Type 5 7: Type 7	T	Same as single-unit type	C	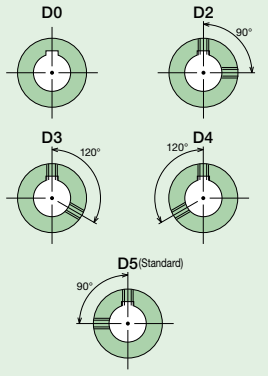	Same as single-unit type • Torque less than 10 N·m is shown to one decimal place. • Specify torque range only if required.

Transmission Capacity and Dimensions

■ TGF20-□2 / TGF30-□2 / TGF45-□2 Type 2

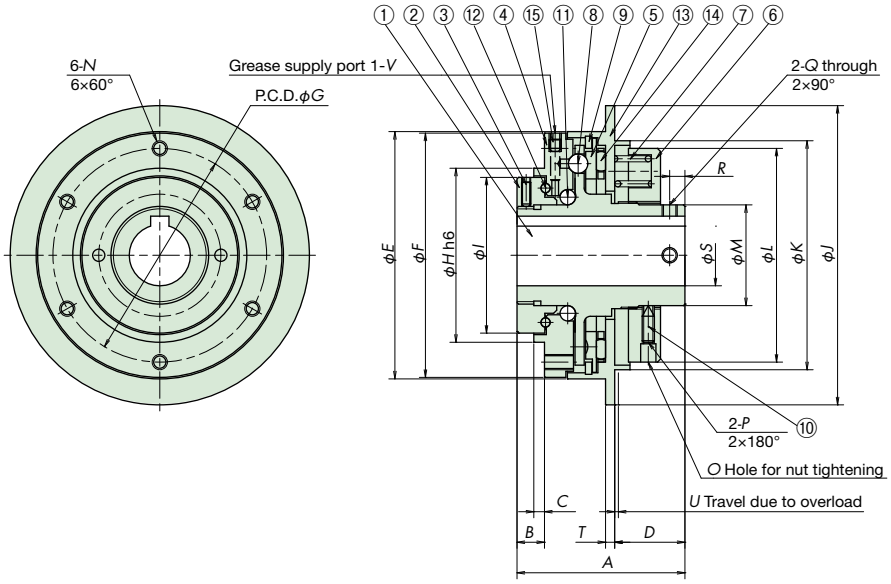

① Hub
② End nut
③ Set screw
④ Drive plate
⑤ Slide plate
⑥ Adjustment nut
⑦ Coil spring
⑧ Drive ball (steel ball A)
⑨ Snap ring
⑩ Set screw
⑪ Steel ball B
⑫ Steel ball C
⑬ Housing
⑭ Thrust bearing
⑮ Set screw

Unit: mm

Model no.	Torque range N·m	Max. rpm*1	Number of coil springs	S			A	B	C	D	E	F	G P.C.D.	H h6	I	J
				Pilot bore dia.	Min. bore dia.	Max. bore dia.										
TGF20-L2	6.0 to 20	900	2	8	10	20	55	9	3.5	23	81	80	70	57	51	98
TGF20-M2	12 to 40		4													
TGF20-H2	24 to 80		8													
TGF30-L2	10 to 74	740	2	10	12	30	80	11	5.5	39	103	100	90	75	69	130
TGF30-M2	20 to 147		4													
TGF30-H2	40 to 294		8													
TGF45-L2	30 to 156	600	3	20	22	45	95	14	7.0	46	142	140	125	100	92	165
TGF45-M2	60 to 313		6													
TGF45-H2	120 to 568		12													

Model no.	K	L	M	N Screw dia. × depth	O Number – hole dia. × depth	P Screw dia. × length	Q Screw dia.*2	R*2	T	U	V Screw dia. × depth	W Screw dia. × length	Mass*3 kg	Moment of inertia*3 kg·m²	Allowable radial load N
TGF20-L2	75	70	33	M5×9	4-φ5×6	M4×12	M5	5	3	1.2	M4×8	—	1.4	0.00108	1300
TGF20-M2															
TGF20-H2															
TGF30-L2	98	92	48	M6×11	4-φ7×7	M6×15	M6	5	4	1.8	M4×8	—	3.3	0.00435	3100
TGF30-M2															
TGF30-H2															
TGF45-L2	132	124	66	M8×13	6-φ7×7	M6×20	M8	8	4	2.2	M4×8	—	6.7	0.0165	3900
TGF45-M2															
TGF45-H2															

*1. Contact a Tsubaki representative when using at speeds higher than the maximum rpm.
*2. Tapped holes for set screws are not processed. Dimensions are for reference only.
*3. Mass and moment of inertia are based on the maximum bore diameter.
Note: Contact a Tsubaki representative if you want to use the Shock Guard at a torque range lower than listed in this catalog.
When installing a pulley or sprocket, use high-tensile bolts (G10.9 or higher) and determine the length carefully so that the bolts are not buried deeper than the mounting tapped hole depth *N*.

Transmission Capacity and Dimensions

■ TGF65-□2 / TGF90-□2

Type 2

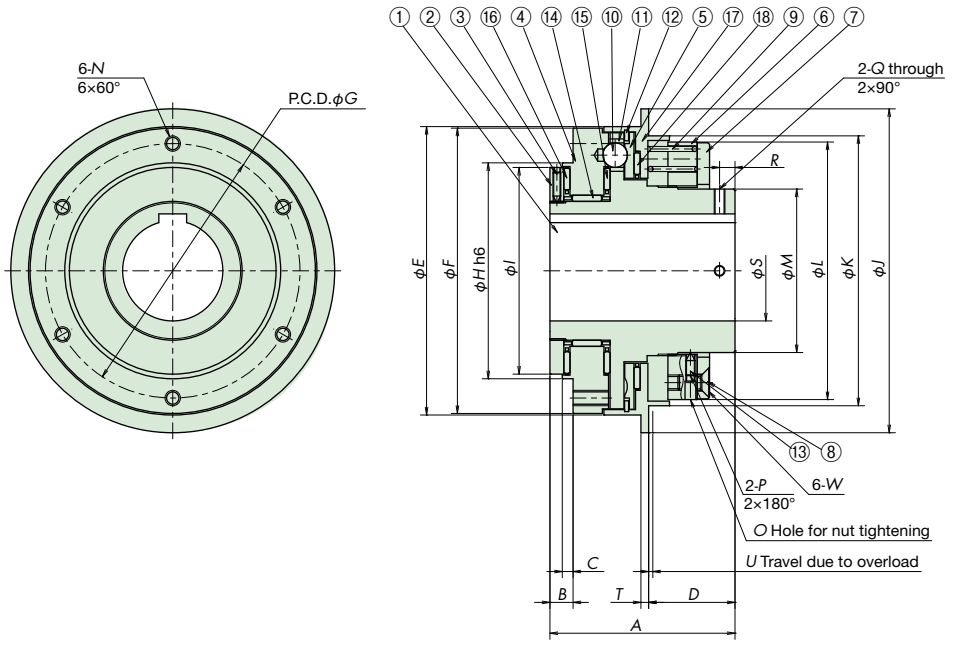

① Hub
② End nut
③ Set screw
④ Drive plate
⑤ Slide plate
⑥ Adjustment nut
⑦ Spring holder
⑧ Bolt
⑨ Coil spring
⑩ Drive ball (steel ball A)
⑪ Bush
⑫ Snap ring
⑬ Set screw
⑭ Radial bearing
⑮ Thrust bearing A
⑯ Thrust bearing A
⑰ Housing
⑱ Thrust bearing B

Unit: mm

Model no.	Torque range N·m	Max. rpm*1	Number of coil springs	S			A	B	C	D	E	F	G P.C.D.	H h6	I	J
				Pilot bore dia.	Min. bore dia.	Max. bore dia.										
TGF65-L2	50 to 269	430	3	30	32	65	120	15	7	56	187	185	165	140	134	210
TGF65-M2	100 to 539		6													
TGF65-H2	200 to1078		12													
TGF90-L2	300 to1225	330	3	45	47	90	170	23	9	93	252	246	215	175	170	280
TGF90-M2	600 to2450		6													
TGF90-H2	1200 to 4900		12													

Model no.	K	L	M	N Screw dia. × depth	O Number – hole dia. × depth	P Screw dia. × length	Q Screw dia.*2	R*2	T	U	V Screw dia. × depth	W Screw dia. × length*3	Mass*4 kg	Moment of inertia*4 kg·m²	Allowable radial load N
TGF65-L2	175	167	106	M10×17	6-φ7×12	M6×20	M10	10	5	2.7	—	M10×20	16	0.0678	30000
TGF65-M2															
TGF65-H2															
TGF90-L2	243	233	150	M16×20	6-φ12×15	M10×30	M12	10	8	5.0	—	M12×35	37	0.267	33000
TGF90-M2															
TGF90-H2															

*1. Contact a Tsubaki representative when using at speeds higher than the maximum rpm.
*2. Tapped holes for set screws are not processed. Dimensions are for reference only.
*3. TGF65 uses hex cap countersunk screws, and TGF90 uses hex bolts.
*4. Mass and moment of inertia are based on the maximum bore diameter.
Note: When installing a pulley or sprocket, use high-tensile bolts (G10.9 or higher) and determine the length carefully so that the bolts are not buried deeper than the mounting tapped hole depth *N*.

Transmission Capacity and Dimensions

■ TGF20-□3 / TGF30-□3 / TGF45-□3 Type 3

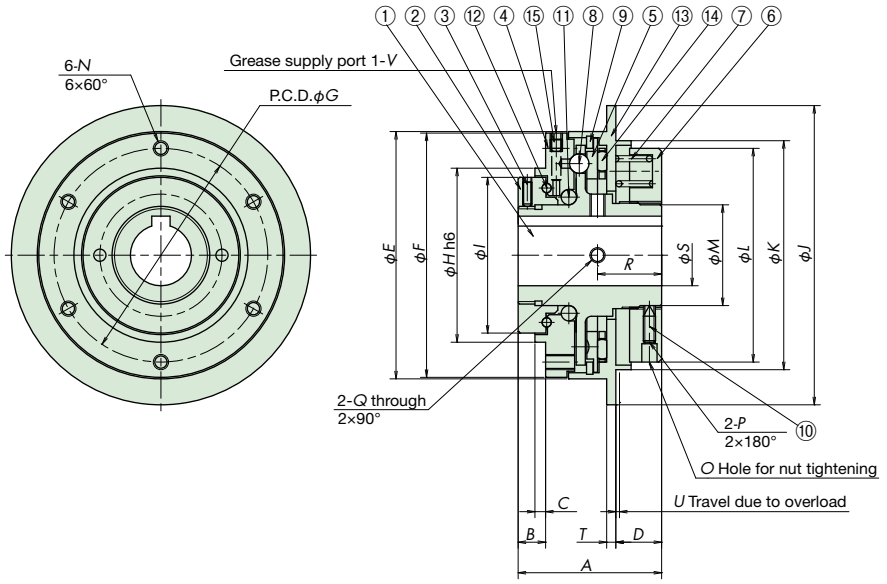

① Hub
② End nut
③ Set screw
④ Drive plate
⑤ Slide plate
⑥ Adjustment nut
⑦ Coil spring
⑧ Drive ball (steel ball A)
⑨ Snap ring
⑩ Set screw
⑪ Steel ball B
⑫ Steel ball C
⑬ Housing
⑭ Thrust bearing
⑮ Set screw

Unit: mm

Model no.	Torque range N·m	Max. rpm*1	Number of coil springs	S			A	B	C	D	E	F	G P.C.D.	H h6	I	J
				Pilot bore dia.	Min. bore dia.	Max. bore dia.										
TGF20-L3	6.0 to 20	900	2	8	10	20	47	9	3.5	15	81	80	70	57	51	98
TGF20-M3	12 to 40		4													
TGF20-H3	24 to 80		8													
TGF30-L3	10 to 74	740	2	10	12	30	71	11	5.5	30	103	100	90	75	69	130
TGF30-M3	20 to 147		4													
TGF30-H3	40 to 294		8													
TGF45-L3	30 to 156	600	3	20	22	45	81	14	7.0	32	142	140	125	100	92	165
TGF45-M3	60 to 313		6													
TGF45-H3	120 to 568		12													

Model no.	K	L	M	N Screw dia. x depth	O Number – hole dia. x depth	P Screw dia. x length	Q Screw dia.*2	R*2	T	U	V Screw dia. x depth	W Screw dia. x length	Mass*3 kg	Moment of inertia*3 kg·m²	Allowable radial load N
TGF20-L3	75	70	33	M5×9	4-φ5×6	M4×12	M5	21	3	1.2	M4×8	—	1.3	0.00108	1300
TGF20-M3															
TGF20-H3															
TGF30-L3	98	92	48	M6×11	4-φ7×7	M6×15	M6	37	4	1.8	M4×8	—	3.2	0.00429	3100
TGF30-M3															
TGF30-H3															
TGF45-L3	132	124	66	M8×13	6-φ7×7	M6×20	M8	40	4	2.2	M4×8	—	6.5	0.0163	3900
TGF45-M3															
TGF45-H3															

*1. Contact a Tsubaki representative when using at speeds higher than the maximum rpm.
*2. Tapped holes for set screws are not processed. Dimensions are for reference only.
*3. Mass and moment of inertia are based on the maximum bore diameter.
Note: Contact a Tsubaki representative if you want to use the Shock Guard at a torque range lower than listed in this catalog.
When installing a pulley or sprocket, use high-tensile bolts (G10.9 or higher) and determine the length carefully so that the bolts are not buried deeper than the mounting tapped hole depth *N*.

Transmission Capacity and Dimensions

■ TGF65-□3 / TGF90-□3

Type 3

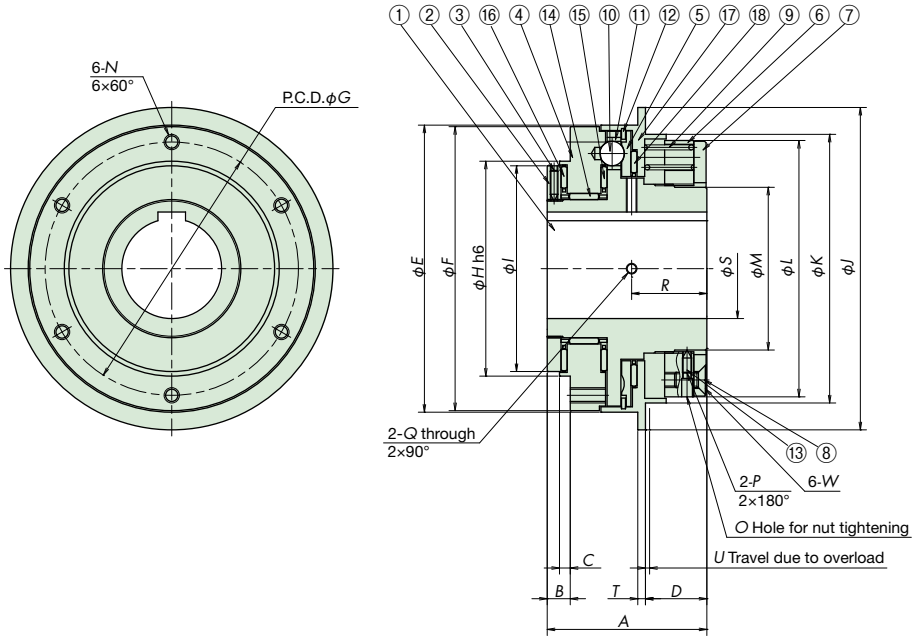

① Hub
② End nut
③ Set screw
④ Drive plate
⑤ Slide plate
⑥ Adjustment nut
⑦ Spring holder
⑧ Bolt
⑨ Coil spring
⑩ Drive ball (steel ball A)
⑪ Bush
⑫ Snap ring
⑬ Set screw
⑭ Radial bearing
⑮ Thrust bearing A
⑯ Thrust bearing A
⑰ Housing
⑱ Thrust bearing B

Unit: mm

Model no.	Torque range N·m	Max. rpm*1	Number of coil springs	S			A	B	C	D	E	F	G P.C.D.	H h6	I	J
				Pilot bore dia.	Min. bore dia.	Max. bore dia.										
TGF65-L3	50 to 269	430	3	30	32	65	104	15	7	40	187	185	165	140	134	210
TGF65-M3	100 to 539		6													
TGF65-H3	200 to 1078		12													
TGF90-L3	300 to 1225	330	3	45	47	90	150	23	9	73	252	246	215	175	170	280
TGF90-M3	600 to 2450		6													
TGF90-H3	1200 to 4900		12													

Model no.	K	L	M	N Screw dia. × depth	O Number – hole dia. × depth	P Screw dia. × length	Q Screw dia.*2	R*2	T	U	V Screw dia. × depth	W Screw dia. × length*3	Mass*4 kg	Moment of inertia*4 kg·m²	Allowable radial load N
TGF65-L3	175	167	106	M10×17	6-φ7×12	M6×20	M10	49	5	2.7	—	M10×20	15.2	0.0662	30000
TGF65-M3															
TGF65-H3															
TGF90-L3	243	233	150	M16×20	6-φ12×15	M10×30	M12	75	8	5.0	—	M12×35	34.7	0.258	33000
TGF90-M3															
TGF90-H3															

*1. Contact a Tsubaki representative when using at speeds higher than the maximum rpm.
*2. Tapped holes for set screws are not processed. Dimensions are for reference only.
*3. TGF65 uses hex cap countersunk screws, and TGF90 uses hex bolts. (Hex bolts will protrude a maximum of 7.5 mm from the hub end.)
*4. Mass and moment of inertia are based on the maximum bore diameter.
Note: When installing a pulley or sprocket, use high-tensile bolts (G10.9 or higher) and determine the length carefully so that the bolts are not buried deeper than the mounting tapped hole depth *N*.

Transmission Capacity and Dimensions

■ TGF20-□5 / TGF30-□5 / TGF45-□5 — Type 5

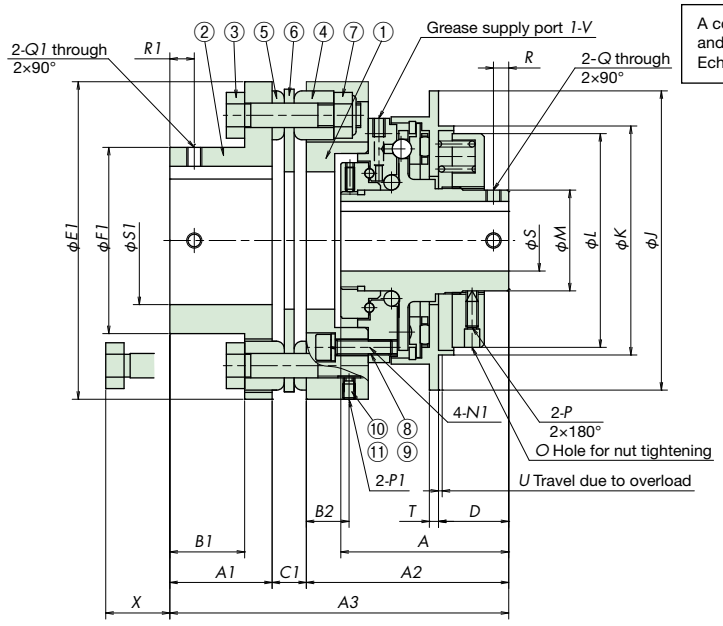

A combination of the TGF-2 and the single-type NEF Series Echt-Flex coupling

① Mounting adapter
② Coupling hub
③ Reamer bolt
④ Washer A
⑤ Washer B
⑥ Disk
⑦ U nut
⑧ Socket bolt
⑨ Spring washer
⑩ Set screw
⑪ Set piece

Unit: mm

Model no.	Torque range N·m	Max. rpm*1	Number of coil springs	Shock Guard S			Coupling S1			A	A1	A2	A3	B1	B2	C1
				Pilot bore dia.	Min. bore dia.	Max. bore dia.	Pilot bore dia.	Min. bore dia.	Max. bore dia.							
TGF20-L5	6.0 to 20	900	2	8	10	20	15	17	42	55	33.5	66.3	111	24.5	14	11.2
TGF20-M5	12 to 40		4													
TGF20-H5	24 to 80		8													
TGF30-L5	10 to 74	740	2	10	12	30	15	17	60	80	47.8	102.5	162	33.8	22	11.7
TGF30-M5	20 to 147		4													
TGF30-H5	40 to 294		8													
TGF45-L5	30 to 156	600	3	20	22	45	25	27	74	95	57.2	110	184	43.2	17	16.8
TGF45-M5	60 to 313		6													
TGF45-H5	120 to 568		12													

Model no.	D	E1	F1	J	K	L	M	N1 Screw dia. × length	O Number – hole dia. × depth	P Screw dia. × length	P1 Screw dia. × length	Q*2	Q1*2	R*2	R1*2	T	U
TGF20-L5	23	104	61	98	75	70	33	M5×20	4-φ5×6	M4×12	M4×6	M5	M5	5	8	3	1.2
TGF20-M5																	
TGF20-H5																	
TGF30-L5	39	143	84	130	98	92	48	M6×25	4-φ7×7	M6×15	M5×6	M6	M6	5	12	4	1.8
TGF30-M5																	
TGF30-H5																	
TGF45-L5	46	168	106	165	132	124	66	M8×25	6-φ7×7	M6×20	M5×6	M8	M8	8	15	4	2.2
TGF45-M5																	
TGF45-H5																	

Model no.	V Screw dia. × depth	W Screw dia. × length	Mass*3 kg	Moment of inertia*3 kg·m²	Coupling model no.	X*4	Allowable misalignment*5	
							Angular (deg.)	Axial
TGF20-L5	M4×8	—	3.0	0.00328	NEF25S	21	1	±1.4
TGF20-M5								
TGF20-H5								
TGF30-L5	M4×8	—	8.0	0.0168	NEF80S	29.5	1	±1.8
TGF30-M5								
TGF30-H5								
TGF45-L5	M4×8	—	13.3	0.0402	NEF130S	20	1	±2.5
TGF45-M5								
TGF45-H5								

*1. Contact a Tsubaki representative when using at speeds higher than the maximum rpm.
*2. Tapped holes for set screws are not processed. Dimensions are for reference only.
*3. Mass and moment of inertia are based on the maximum bore diameter.
*4. Space required for the insertion of a reamer bolt.
*5. The allowable misalignment is the value when the other two misalignments are zero.
Note: Contact a Tsubaki representative if you want to use the Shock Guard at a torque range lower than listed in this catalog.

Transmission Capacity and Dimensions

■ TGF65-□5 / TGF90-□5

Type 5

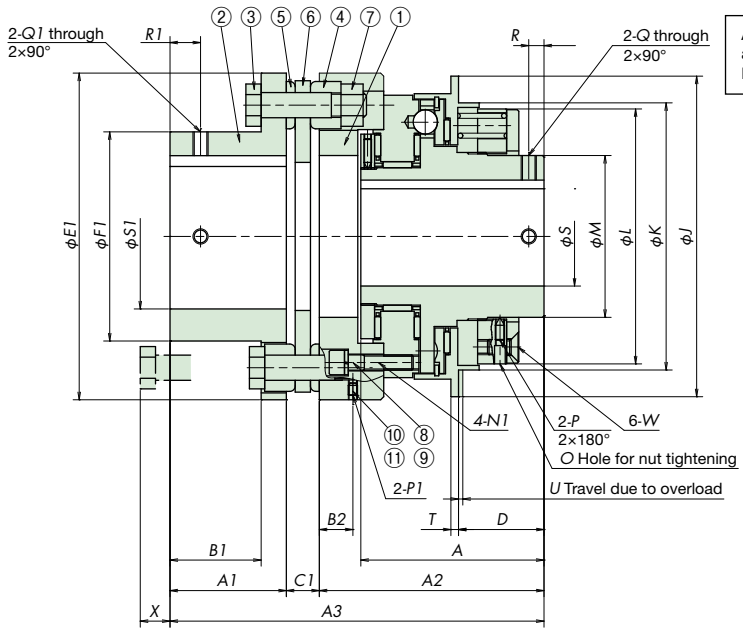

Unit: mm

Model no.	Torque range N·m	Max. rpm*1	Number of coil springs	Shock Guard S			Coupling S1			A	A1	A2	A3	B1	B2	C1
				Pilot bore dia.	Min. bore dia.	Max. bore dia.	Pilot bore dia.	Min. bore dia.	Max. bore dia.							
TGF65-L5	50 to 269	430	3	30	32	65	45	47	95	120	76.2	147.2	245	59.7	22	21.6
TGF65-M5	100 to 539		6													
TGF65-H5	200 to 1078		12													
TGF90-L5	300 to 1225	330	3	45	47	90	50	52	118	170	101.6	211.2	340	76.1	35	27.2
TGF90-M5	600 to 2450		6													
TGF90-H5	1200 to 4900		12													

Model no.	D	E1	F1	J	K	L	M	N1 Screw dia. × length	O Number – hole dia. × depth	P Screw dia. × length	P1 Screw dia. × length	Q*2	Q1*2	R*2	R1*2	T	U
TGF65-L5	56	214	137	210	175	167	106	M10×45	6-φ7×12	M6×20	M6×8	M10	M10	10	20	5	2.7
TGF65-M5																	
TGF65-H5																	
TGF90-L5	93	276	169	280	243	233	150	M16×60	6-φ12×15	M10×30	M6×10	M12	M12	10	30	8	5.0
TGF90-M5																	
TGF90-H5																	

Model no.	V Screw dia. × depth	W Screw dia. × length*3	Mass*4 kg	Moment of inertia*4 kg·m²	Coupling model no.	X*5	Allowable misalignment*6	
							Angular (deg.)	Axial
TGF65-L5	—	M10×20	30.6	0.153	NEF340S	19.5	1	±3.3
TGF65-M5								
TGF65-H5								
TGF90-L5	—	M12×35	71.7	0.604	NEF700S	40	1	±4.0
TGF90-M5								
TGF90-H5								

*1. Contact a Tsubaki representative when using at speeds higher than the maximum rpm.
*2. Tapped holes for set screws are not processed. Dimensions are for reference only.
*3. TGF65 uses hex cap countersunk screws, and TGF90 uses hex bolts.
*4. Mass and moment of inertia are based on the maximum bore diameter.
*5. Space required for the insertion of a reamer bolt.
*6. The allowable misalignment is the value when the other two misalignments are zero.

Transmission Capacity and Dimensions

■ TGF20-□7 / TGF30-□7 / TGF45-□7 — Type 7

A combination of the TGF-2 and the single-type NEF Series Echt-Flex coupling

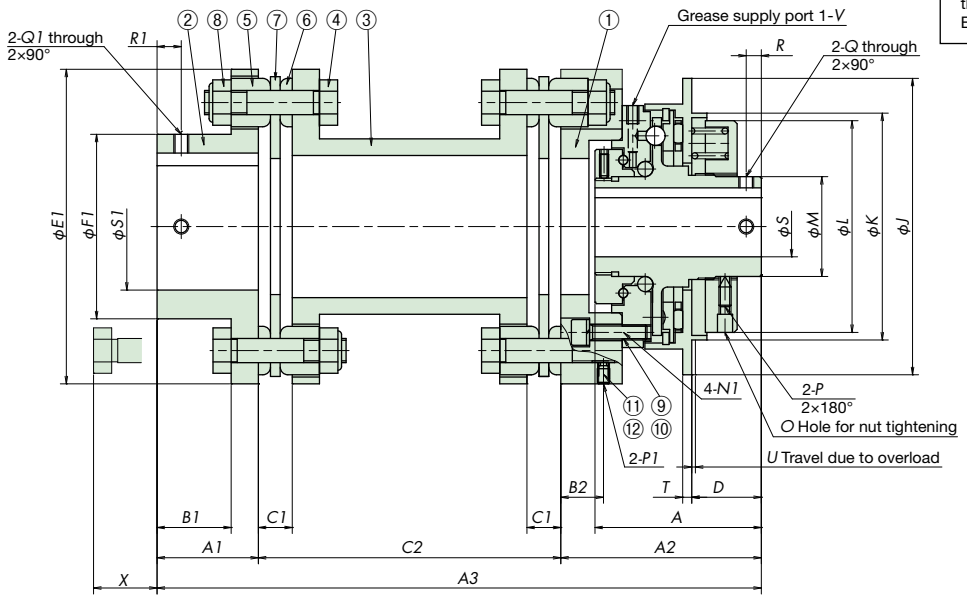

① Mounting adapter
② Coupling hub
③ Long spacer
④ Reamer bolt
⑤ Washer A
⑥ Washer B
⑦ Disk
⑧ U nut
⑨ Socket bolt
⑩ Spring washer
⑪ Set screw
⑫ Set piece

Unit: mm

Model no.	Torque range N·m	Max. rpm*1	Number of coil springs	Shock Guard S			Coupling S1			A	A1	A2	A3	B1	B2	C1	C2
				Pilot bore dia.	Min. bore dia.	Max. bore dia.	Pilot bore dia.	Min. bore dia.	Max. bore dia.								
TGF20-L7	6.0 to 20	900	2	8	10	20	15	17	42	55	33.5	66.3	199.8	24.5	14	11.2	100
TGF20-M7	12 to 40		4														
TGF20-H7	24 to 80		8														
TGF30-L7	10 to 74	740	2	10	12	30	15	17	60	80	47.8	102.5	277.3	33.8	22	11.7	127
TGF30-M7	20 to 147		4														
TGF30-H7	40 to 294		8														
TGF45-L7	30 to 156	600	3	20	22	45	25	27	74	95	57.2	110	307.2	43.2	17	16.8	140
TGF45-M7	60 to 313		6														
TGF45-H7	120 to 568		12														

Model no.	D	E1	F1	J	K	L	M	N1 Screw dia. × length	O Number – hole dia. × depth	P Screw dia. × length	P1 Screw dia. × length	Q*2	Q1*2	R*2	R1*2	T	U
TGF20-L7	23	104	61	98	75	70	33	M5×20	4-φ5×6	M4×12	M4×6	M5	M5	5	8	3	1.2
TGF20-M7																	
TGF20-H7																	
TGF30-L7	39	143	84	130	98	92	48	M6×25	4-φ7×7	M6×15	M5×6	M6	M6	5	12	4	1.8
TGF30-M7																	
TGF30-H7																	
TGF45-L7	46	168	106	165	132	124	66	M8×25	6-φ7×7	M6×20	M5×6	M8	M8	8	15	4	2.2
TGF45-M7																	
TGF45-H7																	

Model no.	V Screw dia. × depth	W Screw dia. × length	Mass*3 kg	Moment of inertia*3 kg·m²	Coupling model no.	X*4	Allowable misalignment*5		
							Angular (deg.)	Parallel	Axial
TGF20-L7	M4×8	—	4.6	0.00549	NEF25W	21	2	1.6	±2.8
TGF20-M7									
TGF20-H7									
TGF30-L7	M4×8	—	11.9	0.0279	NEF80W	29.5	2	2.0	±3.6
TGF30-M7									
TGF30-H7									
TGF45-L7	M4×8	—	18.5	0.0616	NEF130W	20	2	2.2	±5.0
TGF45-M7									
TGF45-H7									

*1. Contact a Tsubaki representative when using at speeds higher than the maximum rpm.
*2. Tapped holes for set screws are not processed. Dimensions are for reference only.
*3. Mass and moment of inertia are based on the maximum bore diameter.
*4. Space required for the insertion of a reamer bolt.
*5. The allowable misalignment is the value when the other two misalignments are zero.
Note: Contact a Tsubaki representative if you want to use the Shock Guard at a torque range lower than listed in this catalog.

Transmission Capacity and Dimensions

■ TGF65-□7 / TGF90-□7

Type 7

A combination of the TGF-2 and the single-type NEF Series Echt-Flex coupling

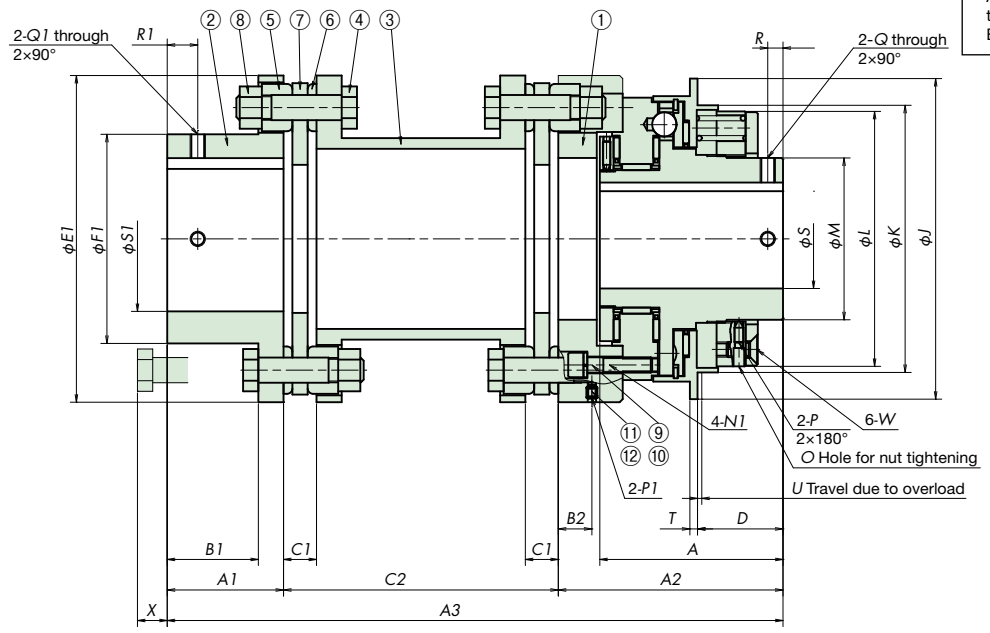

① Mounting adapter
② Coupling hub
③ Long spacer
④ Reamer bolt
⑤ Washer A
⑥ Washer B
⑦ Disk
⑧ U nut
⑨ Socket bolt
⑩ Spring washer
⑪ Set screw
⑫ Set piece

Unit: mm

Model no.	Torque range N·m	Max. rpm*1	Number of coil springs	Shock Guard *S*			Coupling *S1*			*A*	*A1*	*A2*	*A3*	*B1*	*B2*	*C1*	*C2*
				Pilot bore dia.	Min. bore dia.	Max. bore dia.	Pilot bore dia.	Min. bore dia.	Max. bore dia.								
TGF65-L7	50 to 269	430	3	30	32	65	45	47	95	120	76.2	147.2	403.4	59.7	22	21.6	180
TGF65-M7	100 to 539		6														
TGF65-H7	200 to 1078		12														
TGF90-L7	300 to 1225	330	3	45	47	90	50	52	118	170	101.6	211.2	562.8	76.1	35	27.2	250
TGF90-M7	600 to 2450		6														
TGF90-H7	1200 to 4900		12														

Model no.	*D*	*E1*	*F1*	*J*	*K*	*L*	*M*	*N1* Screw dia. × length	*O* Number – hole dia. × depth	*P* Screw dia. × length	*P1* Screw dia. × length	*Q**2	*Q1**2	*R**2	*R1**2	*T*	*U*
TGF65-L7	56	214	137	210	175	167	106	M10×45	6-φ7×12	M6×20	M6×8	M10	M10	10	20	5	2.7
TGF65-M7																	
TGF65-H7																	
TGF90-L7	93	276	169	280	243	233	150	M16×60	6-φ12×15	M10×30	M6×10	M12	M12	10	30	8	5.0
TGF90-M7																	
TGF90-H7																	

Model no.	*V* Screw dia. × depth	*W* Screw dia. × length*3	Mass*4 kg	Moment of inertia*4 kg·m²	Coupling model no.	*X**5	Allowable misalignment*6		
							Angular (deg.)	Parallel	Axial
TGF65-L7	—	M10×20	41.1	0.223	NEF340W	19.5	2	2.8	±6.6
TGF65-M7									
TGF65-H7									
TGF90-L7	—	M12×35	98.2	0.899	NEF700W	40	2	3.9	±8.0
TGF90-M7									
TGF90-H7									

*1. Contact a Tsubaki representative when using at speeds higher than the maximum rpm.
*2. Tapped holes for set screws are not processed. Dimensions are for reference only.
*3. TGF65 uses hex cap countersunk screws, and TGF90 uses hex bolts.
*4. Mass and moment of inertia are based on the maximum bore diameter.
*5. Space required for the insertion of a reamer bolt.
*6. The allowable misalignment is the value when the other two misalignments are zero.

Torque Adjustments

1. From the Torque Correlation Charts, read the value of the torque scale that corresponds to the required torque and then tighten the adjusting nut (6) to this value. To tighten the adjusting nut (6), insert a hook spanner or a round bar into the hole on the outer periphery of the nut and turn it.
   Note: When using the TGF30 or TGF45 and high torque (200 N·m or more) is required, use the custom hook wrench (sold separately).
   If you are using the TGF65 or TGF90 and a high torque is required, loosen the bolt (8) to adjust the torque, turn the adjustment nut (6) to the required torque scale value, lock the adjustment nut (6) with the set screw (13), and then retighten the bolt.
2. After determining the torque value, it is recommended to write it down on the nameplate to ensure that the same torque value can be set during future overhauls. A more accurate torque adjustment can be achieved by marking matchmarks on the nut and hub edge.

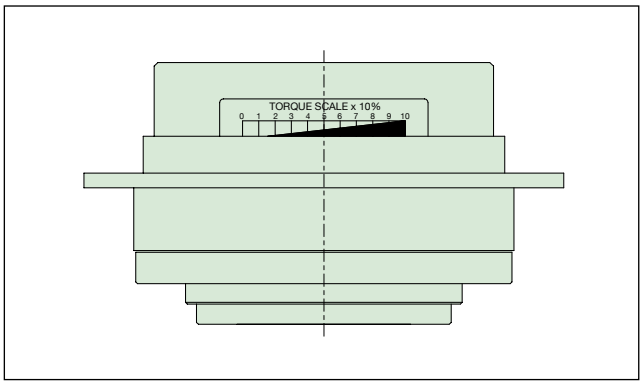

Torque scale

Torque Correlation Charts should be used as a rough guide only, as the trip torque may not correspond with the chart values.

Torque Correlation Charts

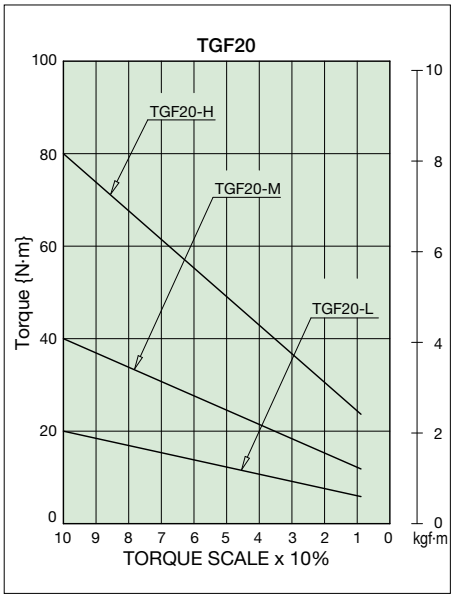

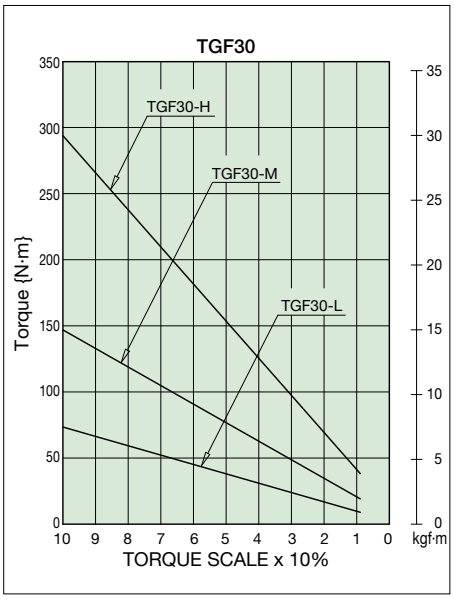

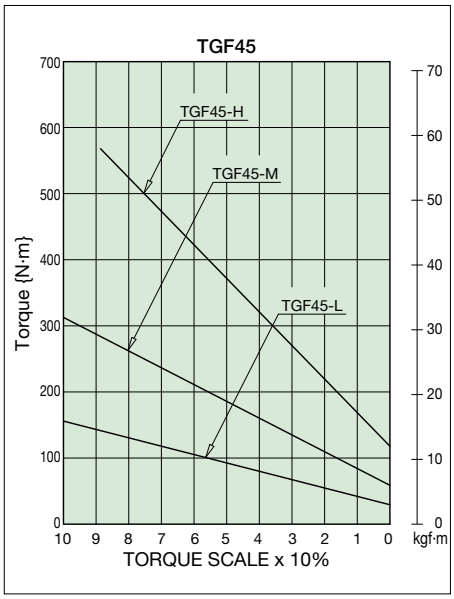

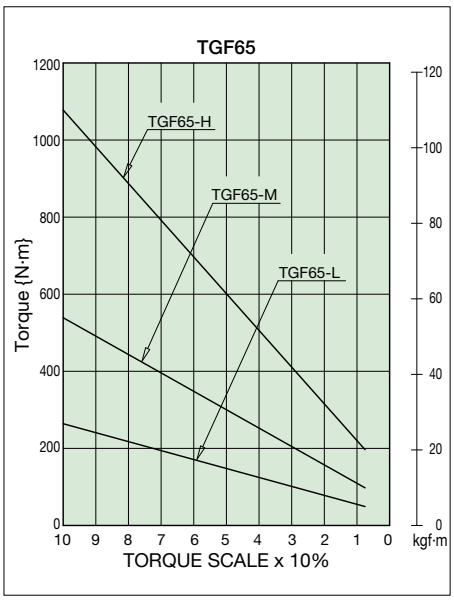

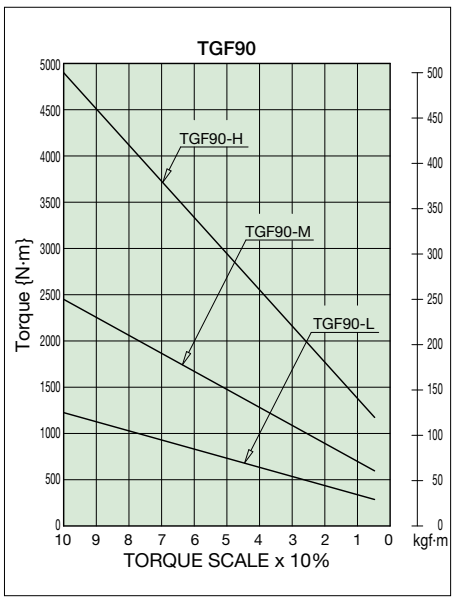

Power-Lock Mounting Dimensions

The Shock Guard TGF Series can be combined with the Power-Lock EL Series.
The maximum applicable sizes of the mounting geometries of the TGF Series are shown below.
The transmission torques of a single unit of Power-Lock are shown below. When using multiple Power-Locks, multiply by the coefficient shown on the right to get the transmission torque.
If you provide us with the dimensions of the shaft and the required torque, we will assist you in selecting the appropriate product.

Number of units	Coefficient
1	1
2	1.55
3	1.85

Mounting Geometry a

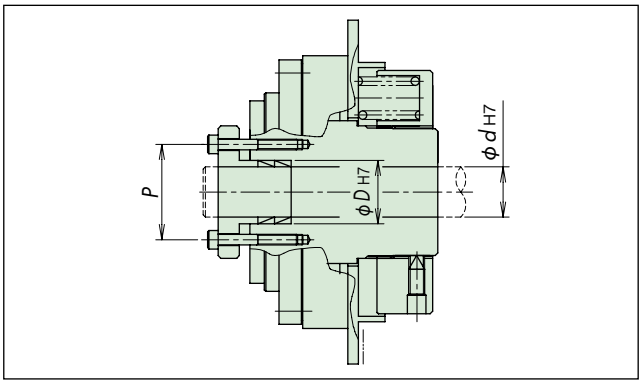

TGF Series size	Mounting geometry					Transmission torque N·m
	Max. applicable size	d	D	P	Bolt	
TGF20	—	—	—	—	—	—
TGF30	18×22	18	22	34	M4× 6	46
TGF45	32×36	32	36	50	M4× 8	123
TGF65	50×57	50	57	73	M6× 8	419
TGF90	71×80	71	80	99	M8×10	1560

Mounting Geometry b

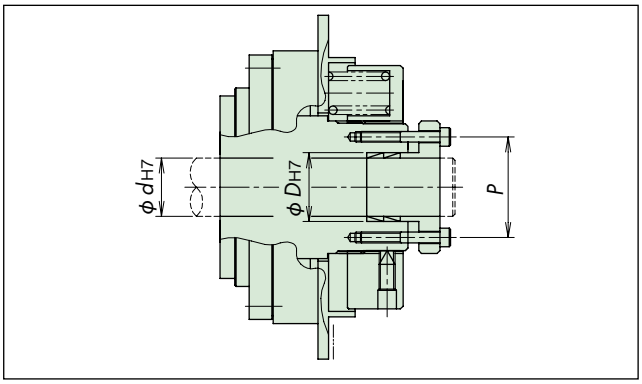

TGF Series size	Mounting geometry					Transmission torque N·m
	Max. applicable size	d	D	P	Bolt	
TGF20	—	—	—	—	—	—
TGF30	22×26	22	26	38	M 4× 6	55
TGF45	35×40	35	40	55	M 5× 6	167
TGF65	65×73	65	73	91	M 8× 8	1140
TGF90	95×106	95	106	126	M10×10	3390

Mounting Geometry c

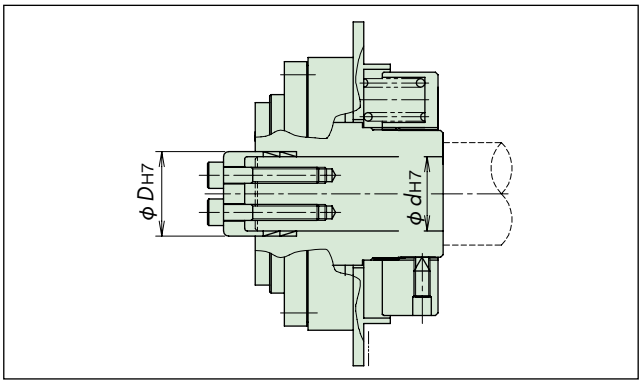

TGF Series size	Mounting geometry				Transmission torque N·m
	Max. applicable size	d	D	Bolt	
TGF20	20×25	20	25	M10×1	39
TGF30	32×36	32	36	M 6×3	100
TGF45	45×52	45	52	M 6×8	321
TGF65	65×73	65	73	M10×4	813
TGF90	85×96	85	96	M10×8	2000

Mounting Geometry d

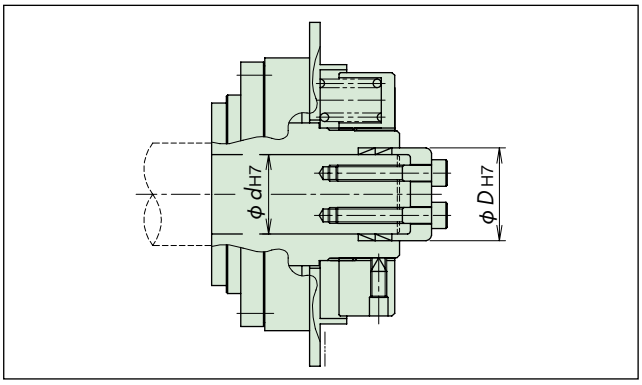

TGF Series size	Mounting geometry				Transmission torque N·m
	Max. applicable size	d	D	Bolt	
TGF20	24×28	24	28	M10×1	56
TGF30	36×42	36	42	M 5×6	144
TGF45	50×57	50	57	M 6×8	397
TGF65	75×84	75	84	M10×6	1260
TGF90	100×114	100	114	M12×8	3450

Shock Guard TGM Series

Features

Sealed structure and superb accuracy.
Excels in wet, dusty, and oily applications.

Sealed structure

The TGM Series is covered with a special aluminum alloy casing and tightly sealed, so it is almost impossible for dust, oil, or water to penetrate, or for oil to leak out. Trip torque accuracy is not affected, making it an ideal overload protection device.

Backlash-free

There is no backlash because the engagement of the cam follower and pocket is a two-point contact.

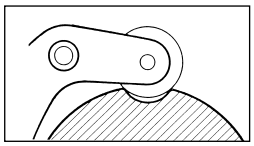

Automatic reset

After removing the cause of the overload, rotating the input side slightly (at 50 r/min or less), or "jogging" the motor will automatically return the motor to its original phase.

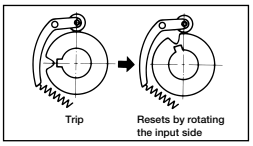

LS detecting plate for overload detection

When the Shock Guard trips, the LS detecting plate slides axially, allowing for easy activation of limit switches to shut down power or sound warning alarms. This feature can be used on either the cam shaft side or the main body (case) side, depending on where it stops during the trip. The LS detecting plate is pre-installed on all TGM Series.

Long life

No need to lubricate

An optimal amount of high-quality grease is sealed in the TGM Series before shipment. The product can be used as is.

One-position design

Because the cam follower and pocket engage together, there is no phase misalignment between the drive side and the driven side.

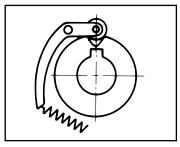



High-precision trip torque

Repeated trip accuracy is within ±5%. A cam follower is pressed firmly against the precision-machined pocket from the radial direction. A highly rigid rectangular spring with a stable spring constant is used. Tripping is a rolling movement; therefore, even repeated trips produce almost no torque variation.

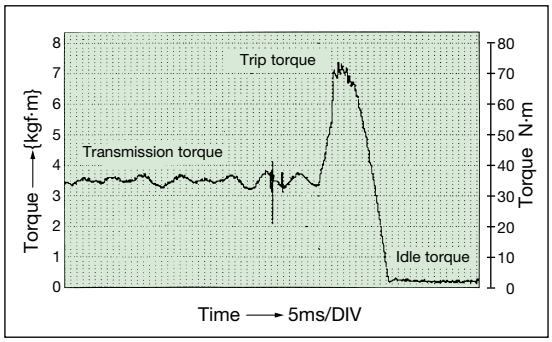

Easy to use

The cam shaft and case can be used as either the drive or passive side, and the direction of rotation is interchangeable. There is flexibility to choose from various drive members such as chains, pulleys, gears, and more. A coupling can also be used. Refer to page 64 for information on roller chain coupling types.

Torque setting is easy

The trip torque can be set accurately by simply turning the adjustment screw with a hexagon wrench. The adjustment screw is on the outer periphery of the Shock Guard, so torque setting is easy even when the device is mounted on a machine.

Structure and Operating Principles

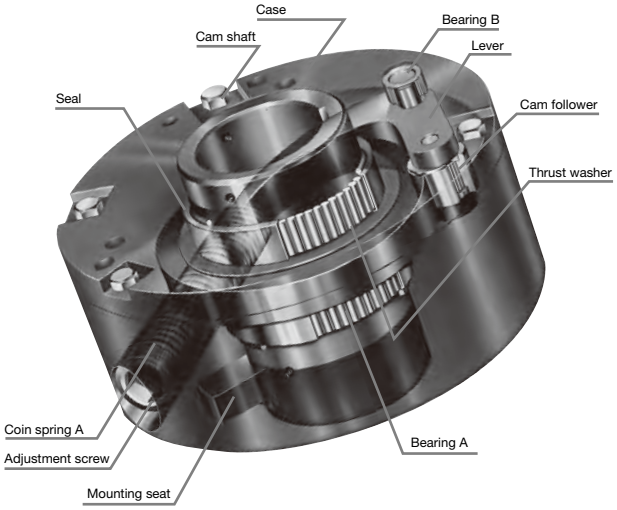

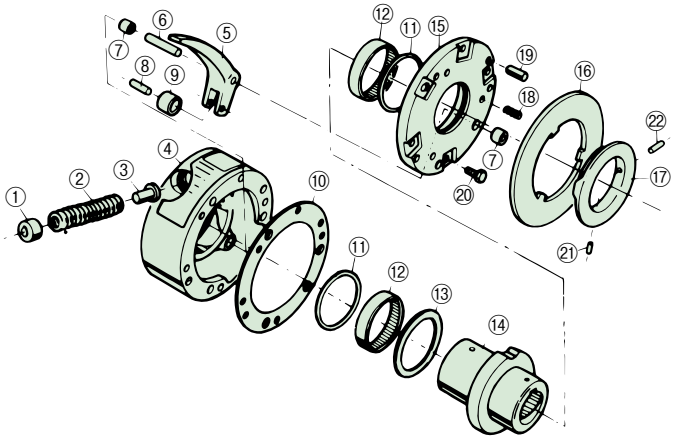

① Adjustment screw
② Coil spring A
③ Spring seat
④ Case
⑤ Lever
⑥ Fulcrum pin
⑦ Bearing B
⑧ Roller pin
⑨ Cam follower
⑩ Gasket
⑪ Seal
⑫ Bearing A
⑬ Thrust washer
⑭ Cam shaft
⑮ Cover
⑯ LS detecting plate
⑰ Cam actuation plate
⑱ Coil spring B
⑲ Spring pin
⑳ Hexagon bolt
㉑ Set screw
㉒ Set screw

TGM60/200/400/800 with strong spring specifications and TGM400/800 with standard specifications employ two coil spring A components.

1. The cam follower transmits torque by engaging with the cam shaft pocket in a radial direction. In the event of an overload, the cam follower pops out of the pocket and completely separates from the overload.
2. The cam follower and pocket are precision machined and heat treated, so the Shock Guard is able to maintain high torque precision for extended periods of time.
3. The cam follower and pocket are a two-point contact system without backlash.
4. The cam follower is pressurized by a single rectangular coil spring that utilizes the lever action to provide precise, high-pressure application.
5. Torque level can be adjusted steplessly with the adjustment screw.
6. In the event of an overload, five needle bearings ensure that there is no slippage. This results in minimal frictional coasting torque.
7. The case and cover are made of special solution-treated aluminum, making them lightweight and strong.
8. Its sealed design provides a structure that resists dust, oil, and water ingress and minimizes the risk of oil leaking.
9. When the Shock Guard trips due to overload, the LS detecting plate slides axially to activate the limit switch for easy overload detection.

Cam and pocket correlation	LS detecting plate movement
During normal operation	
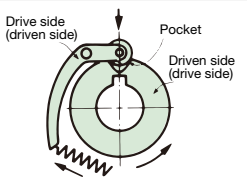 Normal operation	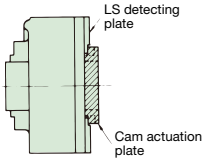 Before trip
During overload	
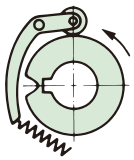 Trip	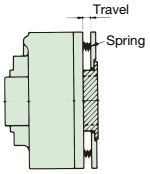 After trip

1. Torque is transmitted by the two-point-contact engagement of the cam follower and pocket.
   The cam follower is pressed firmly into the pocket from the radial direction by a rectangular spring. This eliminates backlash, allowing the Shock Guard to provide overload protection with high trip torque precision.
   Resetting is automatic. As operation resumes, the cam follower returns to its pocket. Two-point contact means there is no phase misalignment from the original position.
2. During overload, the cam follower pops out of its pocket and starts rolling. Since there is no sliding, the friction torque at idle is extremely small. This results in a highly durable mechanism. In addition, the simple structure and single-point engagement method do not affect the high tripping torque accuracy.
3. When the Shock Guard trips, the LS detecting plate slides axially, allowing for easy activation of limit switches to shut down power or sound warning alarms. The LS detecting plate slides three times per trip.

Dimensions

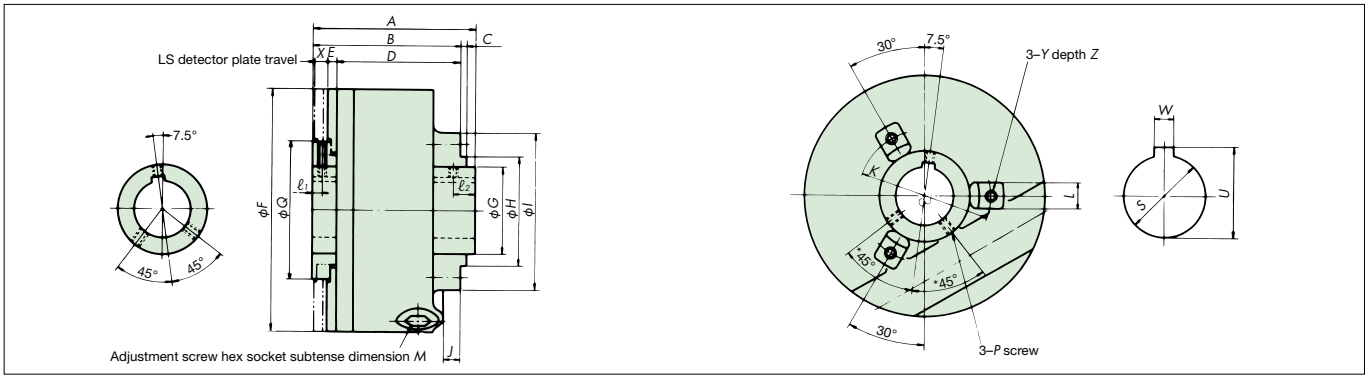

Note: For TGM20 and below models, the angle of 45° marked with an asterisk (*) is 60°. For TGM6 and below models, there are two P screws on the mounting seat side, one at the keyway portion and one to the left of it.

■ Transmission Capacity

Unit: mm

Model no.	Torque range N·m	Max. rpm	Bore range	Moment of inertia $\times 10^{-2}$kg·m^2	Mass kg
TGM3	1.5 to 3.7	600	10 to 14	0.0425	0.6
TGM6	2.5 to 6.4	600	10 to 14	0.0425	0.6
TGM20	6.4 to 20	500	14 to 20	0.168	1.1
TGM60	20 to 69	300	20 to 30	0.938	2.5
TGM200	68 to 225	200	28 to 50	4.03	5.4
TGM400	225 to 451	150	38 to 60	40.0	17.2
TGM800	451 to 902	150	38 to 60	40.0	17.2

■ Dimensions

Unit: mm

Model no.	A	B	C	D	E	F	G	H	I	J	K	L	M	P	Q	ℓ1	ℓ2	SH7	U	W	X	Y	Z
TGM3	60	57	2	48	3	80	22	30 $^{0}_{-0.035}$	50	3	40	8	5	M4	40	4	6	14	16.3	5	4	M 4	8
TGM6	60	57	2	48	3	80	22	30 $^{0}_{-0.035}$	50	3	40	8	5	M4	40	4	6	14	16.3	5	4	M 4	8
TGM20	70	66	3	57	3	100	30	40 $^{0}_{-0.035}$	60	4	50	10	6	M4	50	4	7	20	22.8	6	4	M 5	10
TGM60	89	81	3	68	5	133	47.6	60 $^{0}_{-0.035}$	86	7	73	14	12	M5	76	6	12	30	33.3	8	6	M 6	13
TGM200	110	100	3	85	5	178	69.9	82 $^{0}_{-0.040}$	133	14	114	20	12	M6	105	7	14	50	53.8	14	6	M10	19
TGM400	157	147	9	131	5	273	88.9	114 $^{0}_{-0.050}$	190	17	165	28	17	M8	124	7	16	60	64.4	18	8	M12	28
TGM800	157	147	9	131	5	273	88.9	114 $^{0}_{-0.050}$	190	17	165	28	17	M8	124	7	16	60	64.4	18	8	M12	28

Note: 1. The keyway is finished to JIS 1301-1996 (new JIS standard) dimensions.
2. The torque is temporarily set to the minimum torque value at the time of shipment.

Semi Standard

1. Torque setting

Torque can be set at a Tsubaki factory before shipment if required. The accuracy of the torque setting is within ±5%. The set torque value is printed on the nameplate. The adjustment screw is coated with Loctite 243 or its equivalent to prevent loosening. When ordering, specify the torque value (N·m) after the bore diameter. (Refer to the table on the right.)

2. Weak or strong spring specifications

The weak or strong spring options are available for applications where the required trip torque falls outside the standard range.
(1) TGM6 and TGM800 do not have weak spring specifications.
(2) The standard torque range will be erased from the nameplate, and the weak (strong) spring torque range will be printed.
(3) The minimum and maximum torque values on the nameplate are the same for the weak or strong springs.
(4) Add “WS” for weak spring and “SS” for strong spring to the end of the model number.

Model no.	Weak spring torque range N·m	Strong spring torque range N·m
TGM3 (C)	*0.6 to 1.5	—
TGM6 (C)	—	6.0 to 12
TGM20 (C)	3.7 to 12	7.3 to 23
TGM60 (C)	7.6 to 26	44 to 105
TGM200 (C)	30 to 98	101 to 289
TGM400 (C)	118 to 235	—
TGM800 (C)	—	532 to 1060

* The TGM3 weak spring specification has no O-ring, so it is not a sealed structure.

Coupling Type–Sprocket Combination

■ Coupling Type

These Shock Guard models incorporate a roller chain coupling to provide the high trip torque accuracy of a Shock Guard and the ease of use of a roller chain coupling. They are ideal for direct coupling between the drive and driven machines.
(Contact a Tsubaki representative if you want to directly connect with a backlash-free coupling.)

Transmission Capacity and Dimensions

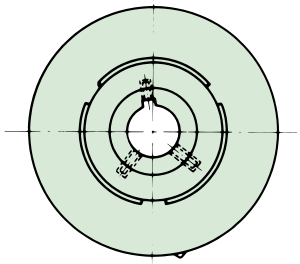

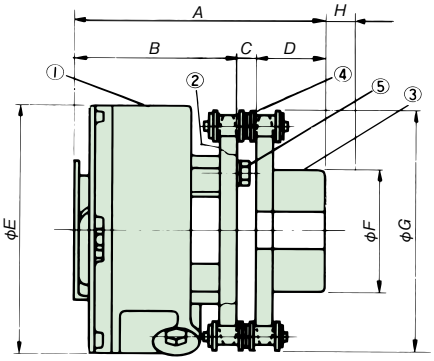

① Shock Guard side
② TG sprocket
③ CP sprocket
④ Chain
⑤ Hexagon bolt

H: The space necessary for inserting the joint link

Unit: mm

Coupling type model no.	Torque range N·m	Max. rpm	Coupling bore dia.		*A*	*B*	*C*	*D*	*E*	*F*	*G*	*H*	Sprocket	Mass kg	Moment of inertia $\times 10^{-2}$kg·m^2
			Pilot bore dia.	Max. bore dia.											
TGM3C	1.5 to 3.7	600	12.5	30	90	64.2	5.8	20	80	50	70	9	RS35-20	1.12	0.07
TGM6C	2.5 to 6.4														
TGM20C	6.4 to 20	500	12.5	32	100	72.2	5.8	22	100	53	82	7	RS35-24	1.78	0.218
TGM60C	20 to 69	300	12.5	42	120.6	88.2	7.4	25	133	63	117	17	RS40-26	4.15	1.21
TGM200C	68 to 225	200	18	55	163.3	111.7	11.6	40	178	83	188	26	RS60-28	11.8	6.80
TGM400C	225 to 451	150	28	75	221.9	161.6	15.3	45	273	107	251	38	RS80-28	31	50.8
TGM800C	451 to 902														

Note: 1. All products are MTO.
2. Apply lubricant such as molybdenum disulfide grease to the chain and sprocket teeth tip every 2,000 hours of use.

■ Sprocket Combinations

Shock Guards can be used as the driving or driven member. Refer to page 14 for sprocket availability.
The following table shows the machining dimensions of sprockets.

Unit: mm

Sprocket model no.	Finished sprocket dimensions		
	d_{H7}	*D*	*Y*
TGM3	30	40	4.5
TGM6	30	40	4.5
TGM20	40	50	5.5
TGM60	60	73	6.6
TGM200	82	114	11.0
TGM400	114	165	14.0
TGM800	114	165	14.0

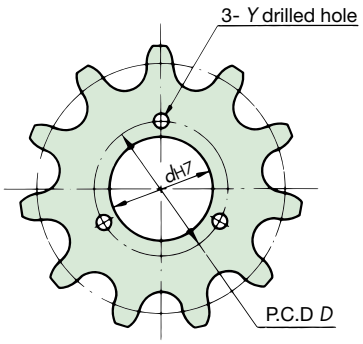

Note: Confirm the chain transmission capacity when determining the number of sprocket teeth.
Insert the joint link from the outside of the sprocket.

Torque Setting

Precise torque can be set by simply turning the adjustment screw with a hexagon wrench.

1. The torque is temporarily set to the minimum torque value at the time of shipment. The front face of the adjustment screw is aligned with the “Min” torque (torque meter line 1) printed on the nameplate. This is the base point at which the adjustment screw is threaded.



2. Before setting the torque, Loctite 243 or an equivalent adhesive should be applied to the exposed threads of the adjustment screw. This prevents loosening after setting the torque.
3. Refer to the Tightening Amount–Torque Correlation Charts below or the table to the right to determine the adjustment screw tightening angle equivalent to the trip torque. Set at 60° toward the determined tightening value, then install on the machine and perform a trip test. Gradually tighten and set at the optimum trip torque. Tightening Amount–Torque Correlation Charts should be used as a rough guide only, as the trip torque may not correspond with the chart values.
4. Do not set the torque lower than the “Min” torque on the nameplate (torque meter line 1). Use a weak spring when a trip torque below the minimum is required.
5. Do not turn the adjustment screw when the Shock Guard is disengaged.
6. Torque can be set at a Tsubaki factory before shipment if required. (Refer to page 63.)

Model no.	Approximate torque per turn N·m {kgf·m}	Max. turns
TGM3	0.28 {0.029}	8
TGM6	0.48 {0.049}	8
TGM20	1.02 {0.10 }	13
TGM60	4.90 {0.5 }	10
TGM200	9.80 {1.0 }	16
TGM400	20.6 {2.1 }	11
TGM800	41.2 {4.2 }	11

Set torque = Min. torque + (Approximate torque per turn × Number of adjustment screw turns)

Tightening Amount–Torque Correlation Charts

TGM3(C), TGM6(C), TGM20(C)

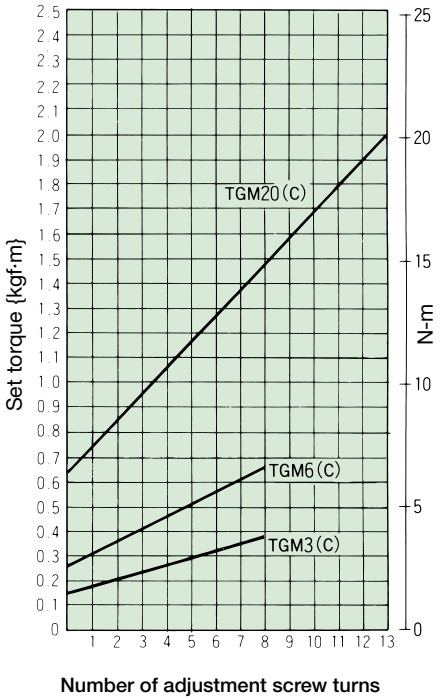

TGM60(C), TGM200(C)

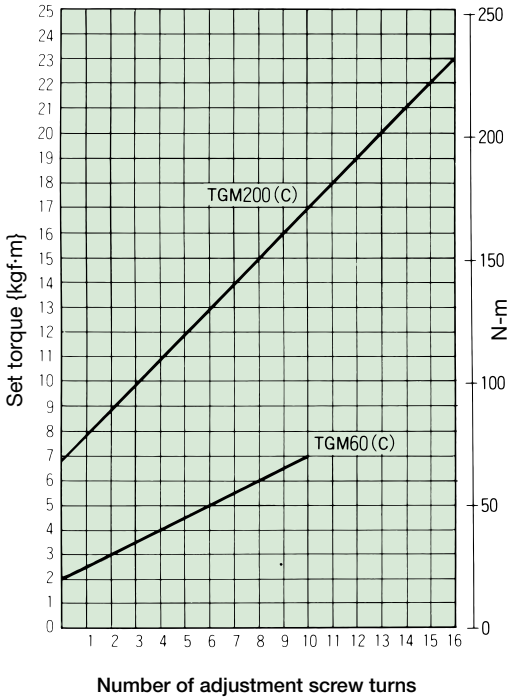

TGM400(C), TGM800(C)

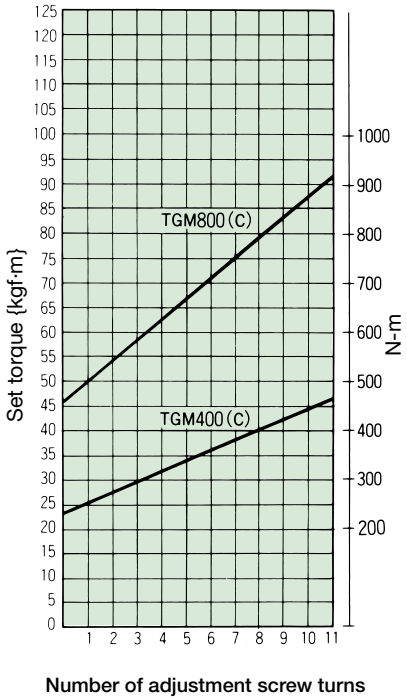

Overload Detection

Overload is easily detected by the limit switch. When the Shock Guard trips due to overload, the cam follower disengages from the pocket, and the cam shaft and main unit (case) will rotate freely. At the same time, the LS detecting plate moves in the axial direction. The limit switch detects this movement and shuts off the power or triggers the warning alarm. The overload can be detected whether the stop side is on the cam shaft side or the main unit (case) side. The LS detecting plate slides three times for each trip.

(1) Table 1 shows LS detecting plate travel and force during tripping. Select a limit switch that meets the PT (pre-travel) and OF (operating force) requirements.
(2) Figures 1 and 2 show limit switch installation examples.
(3) Connect the limit switch's "b" contact parallel to the start button's contact.
(4) Figure 3 shows an example of a typical circuit. Tsubaki recommends using a self-holding circuit.

Table 1

Model no.	Travel mm	Force during travel N {gf}
TGM3	4	3.9 {400}
TGM6	4	3.9 {400}
TGM20	4	3.9 {400}
TGM60	6	3.9 {400}
TGM200	6	5.4 {550}
TGM400	8	5.9 {600}
TGM800	8	5.9 {600}

■ Limit Switch Installation Example

Figure 1

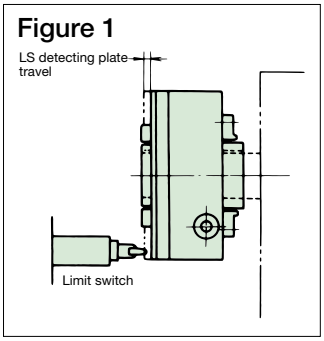

Figure 2

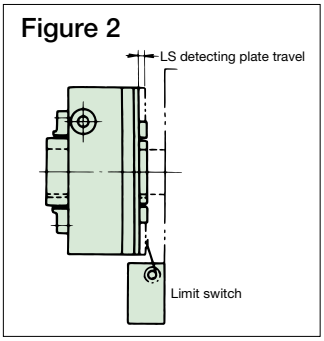

■ Circuit Example

Figure 3

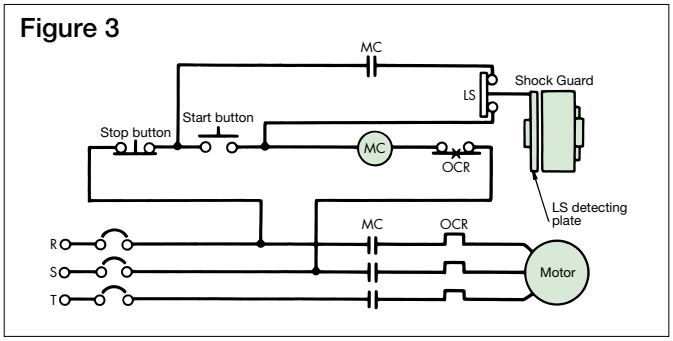

Installation

1. Installing to the shaft

- We recommend a shaft diameter tolerance of h7 for mounting the Shock Guard to the shaft.
  Use a JIS 1301-1996 (new JIS standard) parallel key. Allow some clearance between the top of the key and keyway.
- When fixing the Shock Guard to the shaft, tighten bolts in three places (one for the key, and two for the shaft) on the cam actuation plate.
- Depending on the installation method, such as mounting the Shock Guard to the end face of the shaft, the set bolts for the cam actuation plate may not be usable. In this case, use the tapped holes on the mounting seat side. Set bolts for these tapped holes are not supplied, so use bolts with a length that fits the bore diameter. Make sure that the head of the set bolts does not extend beyond the cam shaft end. If the head of the screws protrudes, they will interfere with the inner diameter and sides of the mounting seats when the Shock Guard trips.
- Loctite 243 or equivalent should be used to prevent loosening if there is a possibility that vibration during operation may cause the bolts to loosen.

2. Installing a drive member

- To install drive members like sprockets, pulleys, gears, and couplings, use the three mounting seats and tighten the bolts with the torque shown in Table 2 on page 67.
- Refer to page 64 for sprocket installation.
  If you need to use a Tsubaki Power-Lock (keyless locking device) or a backlash-free coupling, contact a Tsubaki representative.

Installation Diagram

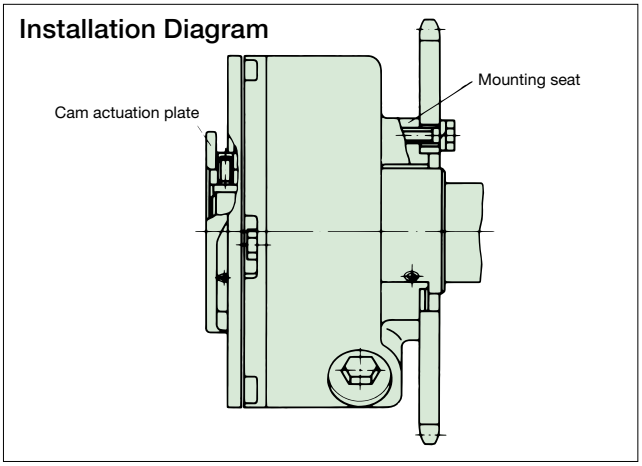

3. Mounting bolts

Table 2 lists the recommended screw-in lengths and tightening torques for bolts attached to the case's mounting seat. The bolt pilot bores should have a JIS grade of B10012 or lower.

Table 2

Model no.	Bolt screw-in length (mm)	Bolt tightening torque N·m {kgf·m}	Pilot bore dia. for mounting bolt (mm)
TGM3	6 to 7	2.0 to 2.9 {0.2 to 0.3}	4.5
TGM6	6 to 7	2.0 to 2.9 {0.2 to 0.3}	4.5
TGM20	8 to 9	3.9 to 5.9 {0.4 to 0.6}	5.5
TGM60	9 to 11	6.9 to 11 {0.7 to 1.1}	6.6
TGM200	15 to 17	34 to 51 {3.5 to 5.2}	11.0
TGM400	18 to 25	59 to 89 {6.0 to 9.1}	14.0
TGM800	18 to 25	59 to 89 {6.0 to 9.1}	14.0

4. Connecting

The input/output connection is placed between the variator, reducer, or intermittent drive device and the machine/device. Figures 4, 5, and 6 show typical connecting examples.

Figure 4

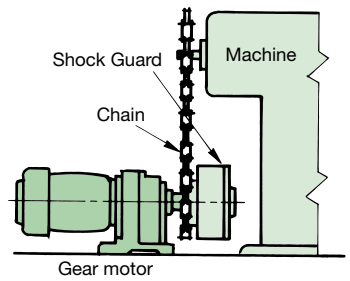

Figure 5

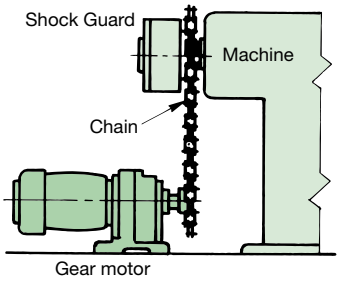

Figure 6

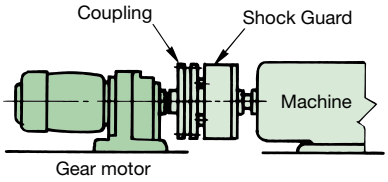

Resetting

Simply restarting the drive side (motor, etc.) automatically resets the device.

1. When the Shock Guard trips due to overload, stop the rotation and remove the cause of the overload.
2. Reset with an input rpm of 50 or less by "jogging" the motor. To avoid injury, do not reset the Shock Guard main unit or the shaft by hand.
3. A distinct clicking sound is made when the cam follower settles in its pocket.

Lubrication

The TGM Series is sealed with high-quality grease before shipment and does not require additional lubrication under normal operating conditions.

Grease used

EMG Lubricants	Mobilux EP-2

Note: The above product name is a trademark of EMG Lubricants LLC.

Shock Guard Finished Bore TGM and Coupling Type TGM-C

New model numbering **As of April 2, 2018**

Model Numbering Example

■ Single-unit type

TGM60-TH30JDY-WS-N25

Series	Size	Shock Guard side	Bore tolerance	Bore dia. (1 mm increments)	Keyway tolerance	Set screw position (seen from LS detector plate side)	Spring specifications	Torque range
TGM	3 6 20 60 200 400 800	T	F : F7 G : G7 H : H7 J : JS7 P : P7 M : M7 N : N7 K : K7 R : R7	Size Min. to max 3 : 10 to 14 6 : 10 to 14 20 : 14 to 20 60 : 20 to 30 200 : 28 to 50 400 : 38 to 60 800 : 38 to 60	J: New JIS Js9 P: New JIS P9 F: Old JIS F7 E: Old JIS E9	DY 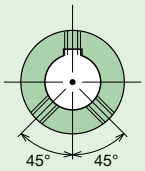 45° 45° • 60° for TGM20 and smaller.	Standard: Blank WS: Weak spring (except for TGM6 and TGM800) SS: Strong spring (except for TGM3 and TGM40)	Size N·m 3 : 0.6 to 3.7 6 : 2.5 to 12 20 : 3.7 to 23 60 : 7.6 to 105 200 : 30 to 289 400 : 118 to 451 800 : 451 to 7150 • Torque less than 10 N·m is shown to one decimal place. • Specify torque range only if required.

Note: TGM series is not sold with pilot bores.

■ Coupling type

TGM60C-TH20JDYXCH30ED2-WS-N98

Series Size	Coupling type	Shock Guard side, bore tolerance, bore dia., set screw position	Coupling side	Bore tolerance	Coupling side bore dia. (1 mm increments)	Keyway tolerance	Set screw position (seen from hub end)	Spring specifications	Torque range
Same as single-unit type	C	Same as single-unit type	C	F : F7 G : G7 H : H7 J : JS7 P : P7 M : M7 N : N7 K : K7 R : R7	Size Min. to max 3 : 14 to 30 6 : 14 to 30 20 : 14 to 32 60 : 14 to 42 200 : 20 to 55 400 : 30 to 75 800 : 30 to 75	J: New JIS Js9 P: New JIS P9 F: Old JIS F7 E: Old JIS E9	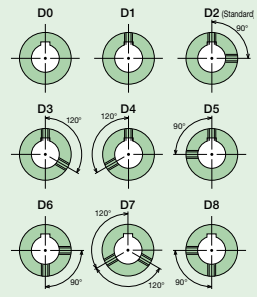 	Standard: Blank WS: Weak spring (except for TGM6 and TGM800) SS: Strong spring (except for TGM3 and TGM40)	Size N·m 3 : 0.6 to 3.7 6 : 2.5 to 12 20 : 3.7 to 23 60 : 7.6 to 105 200 : 30 to 289 400 : 118 to 451 800 : 451 to 7150 • Torque less than 10 N·m is shown to one decimal place. • Specify torque range only if required.
				Pilot bore: R					

Shock Guard TGM		Shock Guard side			Coupling side (coupling type only)	
Shock Guard model no.		Set screw (other than keyway)	Set screw position		Set screw	Set screw position
Model no.	Bore dia. (mm)		*L1*	*L2*		
TGM3(-C) TGM6(-C)	10 to 12	M4× 8 (M4×10)	4	6	M4×4	7
	13 to 14	M4× 6 (M4× 8)				
TGM20(-C)	14 to 16	M4×10 (M4×12)	4	7	M4×4	7
	17 to 20	M4× 8 (M4×10)				
TGM60(-C)	20 to 22	M5×16 (M5×20)	6	12	M5×5	8
	23 to 28	M5×12 (M5×16)				
	29 to 30	M5×12 (M5×12)				
TGM200(-C)	28 to 30	M6×25 (M6×30)	7	14	M6×6	13
	31 to 40	M6×20 (M6×25)				
	41 to 50	M6×16 (M6×20)				
TGM400(-C) TGM800(-C)	38 to 45	M8×25 (M8×30)	7	16	M8×8	15
	46 to 55	M8×20 (M8×25)				
	56 to 60	M8×16 (M8×20)				

Shock Guard TGK Series (Former MYTORQ 630 Series)

Features

A multifunctional product combining a ball-type overload protection device and a pneumatic clutch function.



Pneumatic torque adjustment mechanism

Adjusting the air pressure in the regulator lets you remotely adjust the torque during operation.

High accuracy

Backlash is minimal.

Pneumatic clutch on–off mechanism

Can also be used as an on–off clutch via remote control.

One-position design

The balls and pockets, which transfer the torque, are arranged in a unique way in which they engage in only one position.

TGK	
Type 2	Type A sprockets and pulleys can be directly mounted.
Type 5	The Echt-Flex coupling provides an angular tolerance. Parallelism errors are not allowed.
Type 7	The Echt-Flex coupling provides angular and parallelism tolerances.

Structure and Operating Principles

TGK20 to TGK45

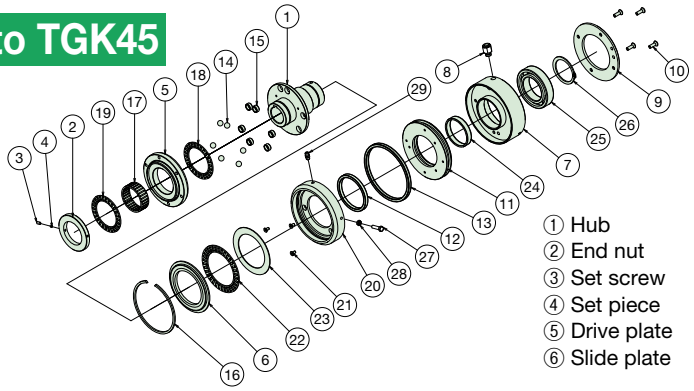

① Hub
② End nut
③ Set screw
④ Set piece
⑤ Drive plate
⑥ Slide plate
⑦ Cylinder
⑧ Pipe joint
⑨ Cylinder cover
⑩ Hex cap countersunk screw
⑪ Piston
⑫ Seal A
⑬ Seal B
⑭ Drive ball (steel ball A)
⑮ Bush
⑯ Snap ring A
⑰ Radial bearing
⑱⑲ Thrust bearing A
⑳ Housing
㉑ Hex cap countersunk screw
㉒ Thrust bearing B
㉓ Thrust race
㉔ Dry bearing
㉕ Ball bearing
㉖ Snap ring B
㉗ Sensor target
㉘ Hex nut
㉙ Grease nipple

During normal operation (engagement)

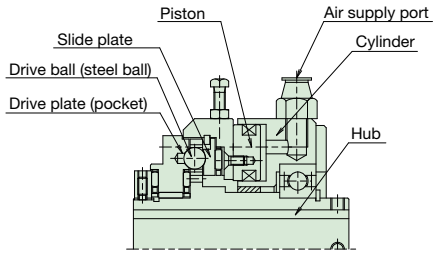

Torque is transmitted from the hub → drive balls → drive plate on the output side (or vice versa).
Sprockets and timing pulleys are bolted directly to this drive plate.
The hub flange has several holes to hold the drive balls.
There are pockets on the drive plate where the drive balls are pressured by coil springs via the thrust race to transmit the torque.
When air is supplied to the cylinder through the air supply port, the piston moves toward the drive plate. The drive balls are pushed over the slide plate. Thus, the driving force is transmitted.
The torque can be changed according to the load during operation. The torque can also be changed automatically by creating a pressure change system using a timer or controller. By using such a system, it is possible to switch between a low operating torque and a high torque corresponding to the starting torque, so that the torque can be set to the optimum value for the machine.

During overload (tripping)

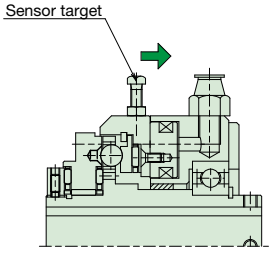

When an overload occurs, the drive balls push the carriage back against the air pressure toward the cylinder. The balls then pop out of the pockets and begin to idle. At this time, the sensor target moves toward the cylinder. The amount of sensor travel is sensed by a limit switch. By removing the air from the cylinder to eliminate the force on the drive balls, the driving force is completely released, and the machine is protected.

● Clutch mechanism

To disconnect the drive source for adjustment or maintenance of the machine, stop feeding air and remove the air from the cylinder. The housing and slide plate are then pushed back toward the cylinder by the built-in spring. This causes the drive balls to come out of the pockets on the drive plate for disengagement. The drive plate has a bearing inside, so there is no problem even if the drive plate is left idle for a long period.

● Resetting (clutching) procedure

When air is supplied through the air supply port and the operation is restarted, the balls will automatically return to their original positions within a single revolution. In the event of an overload, if air is still supplied and the TGK Series continues to rotate, it will repeatedly reset. Therefore, it is recommended to use a limit switch or a similar device to detect an overload and stop the air supply.

Model Numbering Example

New model numbering As of April 2, 2018

■ Single-unit type

TGK20-A2-TH20JD2

Series	Size	Pneumatic pressure	Type	Shock Guard side	Bore tolerance	Bore dia. (1 mm increments)	Keyway tolerance	Set screw position (seen from adjustment nut side)
TGK	20 30 45	A: Pneumatic pressure	2: Type 2	T	F : F7 G : G7 H : H7	Size Min. to max 20 : 10 to 20 30 : 12 to 30 45 : 22 to 45	J: New JIS Js9 P: New JIS P9 F: Old JIS F7	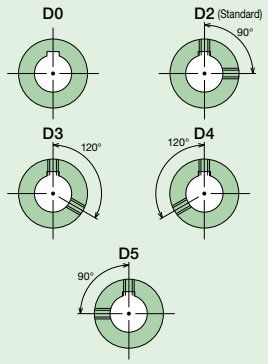

Note: TGK Series is not sold with pilot bores.

■ Coupling type

TGK20-A5-TH20JD2XCH30JD2

Series Size Pneumatic pressure	Type	Shock Guard side	Bore tolerance, bore dia., set screw position	Coupling side	Bore tolerance	Bore dia. (1 mm increments)	Keyway tolerance	Set screw position (seen from coupling hub end)
Same as single-unit type	5: Type 5 7: Type 7	T	Same as single-unit type	C	F : F7 G : G7 H : H7	Size Min. to max 20 : 17 to 42 30 : 17 to 60 45 : 27 to 74	J: New JIS Js9 P: New JIS P9 F: Old JIS F7	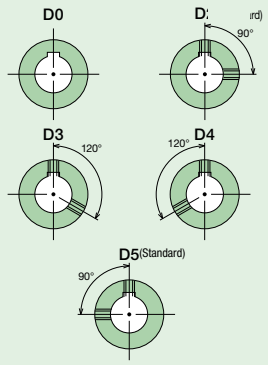

Transmission Capacity and Dimensions

■ TGK20-A2 / TGK30-A2 / TGK45-A2 — Type 2

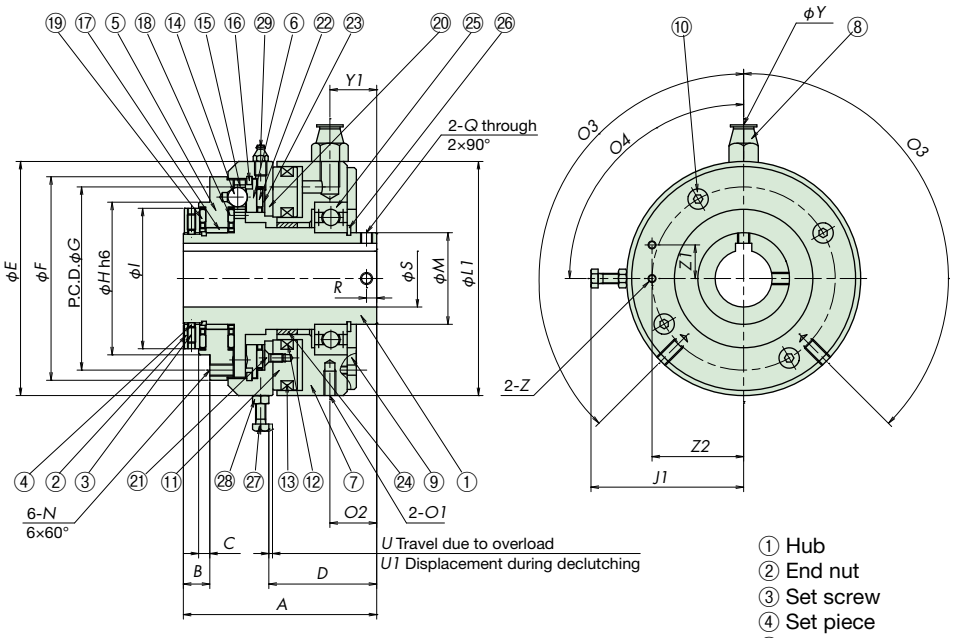

① Hub
② End nut
③ Set screw
④ Set piece
⑤ Drive plate
⑥ Slide plate
⑦ Cylinder
⑧ Pipe joint
⑨ Cylinder cover
⑩ Hex cap countersunk screw
⑪ Piston
⑫ Seal A
⑬ Seal B
⑭ Drive ball (steel ball A)
⑮ Bush
⑯ Snap ring A
⑰ Radial bearing
⑱⑲ Thrust bearing A
⑳ Housing
㉑ Hex cap countersunk screw
㉒ Thrust bearing B
㉓ Thrust race
㉔ Dry bearing
㉕ Ball bearing
㉖ Snap ring B
㉗ Sensor target
㉘ Hex nut
㉙ Grease nipple

Unit: mm

Model no.	Torque range N·m	Max. rpm*1	Pneumatic pressure MPa	Shock Guard S			A	B	C	D	E	F	G P.C.D.	H h6	I
				Pilot bore dia.	Min. bore dia.	Max. bore dia.									
TGK20-A2	15 to 65	340	0.14 to 0.55	8	10	20	79	11	3.5	45.5	88	80	70	57	51
TGK30-A2	30 to 147	230	0.14 to 0.55	10	12	30	95	13	5.5	53	115	100	90	75	69
TGK45-A2	90 to 392	430	0.14 to 0.55	20	22	45	124	15.5	7	74.4	159	140	125	100	94

Model no.	J1	L1	M	N Screw dia. × depth	O1 Screw dia. × depth	O2	O3	O4	Q Screw dia.*2	R*2	U	U1	Air supply port Y*3	Y1
TGK20-A2	61	88	30	M5×9	M5×10	21	135°	90°	M5	5	1.2	1.8	4	21
TGK30-A2	75	115	45	M6×11	M6×12	23	135°	90°	M6	5	1.8	2.0	8	23
TGK45-A2	98	159	60	M8×13	M8×15	34	120°	90°	M8	8	2.2	2.9	8	34

Model no.	Z		Z1	Z2	Mass*4 kg	Moment of inertia*4 kg·m²	Allowable radial load N
	Screw dia. × depth	Counterbore dia. × depth					
TGK20-A2	M4×10	φ5×3.5	15	35	2.3	0.00061	6200
TGK30-A2	M4×10	φ5×4.5	16.5	45	4.6	0.00201	9500
TGK45-A2	M5×10	φ6×5	20	65	11.2	0.00854	12700

*1. Contact a Tsubaki representative for use at speeds higher than the maximum rpm.
*2. Tapped holes for set screws are not processed. Dimensions are for reference only.
*3. Y represents the outer diameter of the applicable tube.
*4. Mass and moment of inertia are based on the maximum bore diameter.
Note: When installing a pulley or sprocket, use high-tensile bolts (G10.9 or higher) and determine the length carefully so that the bolts are not buried deeper than the mounting tapped hole depth *N*.
The air supply port is a pipe joint applicable to both nylon and urethane tubes.
A limit switch installation example is shown on page 74.

Transmission Capacity and Dimensions

■ TGK20-A5 / TGK30-A5 / TGK45-A5 — Type 5

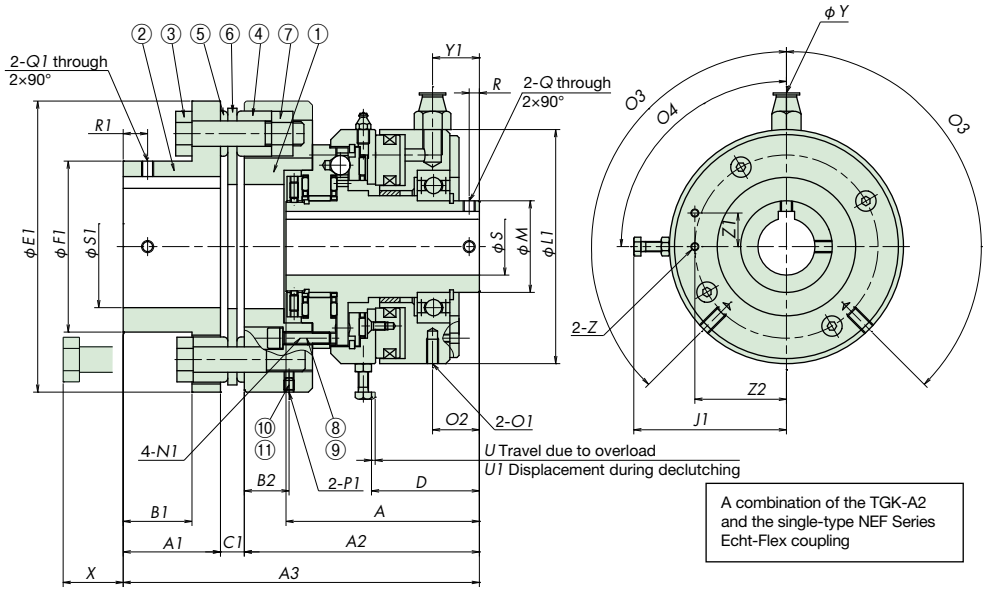

A combination of the TGK-A2 and the single-type NEF Series Echt-Flex coupling

① Mounting adapter
② Coupling hub
③ Reamer bolt
④ Washer A
⑤ Washer B
⑥ Disk
⑦ U nut
⑧ Socket bolt
⑨ Spring washer
⑩ Set screw
⑪ Set piece

Unit: mm

Model no.	Torque range N·m	Max. rpm*1	Pneumatic pressure MPa	Shock Guard *S*			Coupling *S1*			*A*	*A1*	*A2*	*A3*	*B1*	*B2*	*C1*	*D*
				Pilot bore dia.	Min. bore dia.	Max. bore dia.	Pilot bore dia.	Min. bore dia.	Max. bore dia.								
TGK20-A5	15 to 65	340	0.14 to 0.55	8	10	20	15	17	42	79	33.5	88.3	133	24.5	14	11.2	45.5
TGK30-A5	30 to 147	230	0.14 to 0.55	10	12	30	15	17	60	95	47.8	115.5	175	33.8	22	11.7	53
TGK45-A5	90 to 392	430	0.14 to 0.55	20	22	45	25	27	74	124	57.2	137.5	211.5	43.2	17	16.8	74.4

Model no.	*E1*	*F1*	*J1*	*L1*	*M*	*N1* Screw dia. × length	*O1* Screw dia. × depth	*O2*	*O3*	*O4*	*P1* Screw dia. × length	*Q* Screw dia.*2	*Q1* Screw dia.*2	*R**2	*R1**2	*U*	*U1*	Air supply port *Y**3	*Y1*
TGK20-A5	104	61	61	88	30	M5×20	M5×10	21	135°	90°	M4×6	M5	M5	5	8	1.2	1.8	4	21
TGK30-A5	143	84	75	115	45	M6×25	M6×12	23	135°	90°	M5×6	M6	M6	5	12	1.8	2.0	8	23
TGK45-A5	168	106	98	159	60	M8×25	M8×15	34	120°	90°	M5×6	M8	M8	8	15	2.2	2.9	8	34

Model no.	*Z*		*Z1*	*Z2*	Mass*4 kg	Moment of inertia*4 kg·m²	Coupling model no.	*X**5	Allowable misalignment*6	
	Screw dia. × depth	Counterbore dia. × depth							Angular (deg.)	Axial
TGK20-A5	M4×10	φ5×3.5	15	35	4.0	0.00282	NEF25S	21	1	±1.4
TGK30-A5	M4×10	φ5×4.5	16.5	45	9.4	0.0144	NEF80S	29.5	1	±1.8
TGK45-A5	M5×10	φ6×5	20	65	17.8	0.0323	NEF130S	20	1	±2.5

*1. Contact a Tsubaki representative for use at speeds higher than the maximum rpm.
*2. Tapped holes for set screws are not processed. Dimensions are for reference only.
*3. Y represents the outer diameter of the applicable tube.
*4. Mass and moment of inertia are based on the maximum bore diameter.
*5. Space required for the insertion of a reamer bolt.
*6. The allowable misalignment is the value when the other two misalignments are zero.
Note: The air supply port is a pipe joint applicable to both nylon and urethane tubes.
A limit switch installation example is shown on page 74.
Parallelism errors are not allowed.

Transmission Capacity and Dimensions

■ TGK20-A7 / TGK30-A7 / TGK45-A7 — Type 7

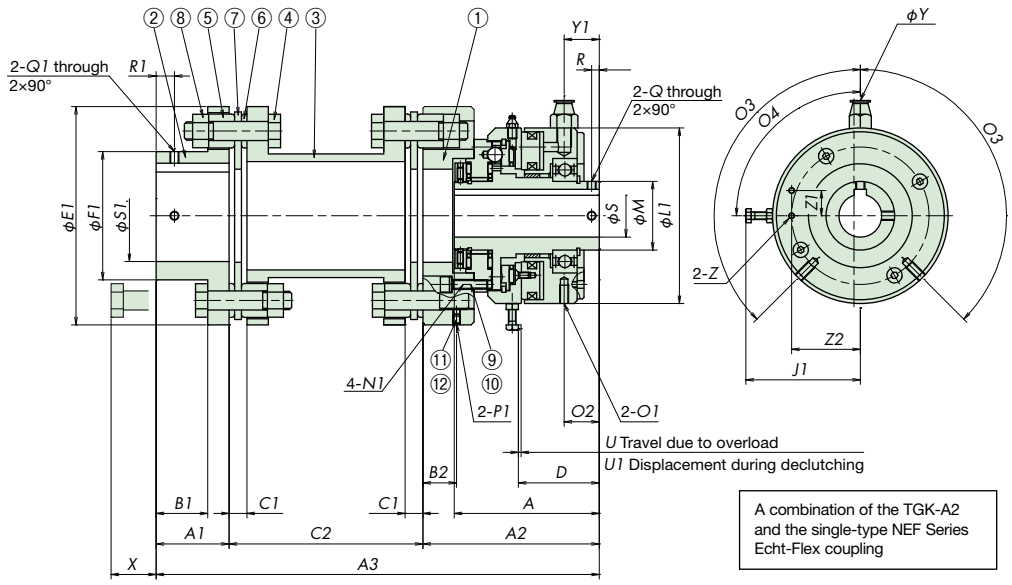

A combination of the TGK-A2 and the single-type NEF Series Echt-Flex coupling

① Mounting adapter
② Coupling hub
③ Long spacer
④ Reamer bolt
⑤ Washer A
⑥ Washer B
⑦ Disk
⑧ U nut
⑨ Socket bolt
⑩ Spring washer
⑪ Set screw
⑫ Set piece

Unit: mm

Model no.	Torque range N·m	Max. rpm*1	Pneumatic pressure MPa	Shock Guard S			Coupling S1			A	A1	A2	A3	B1	B2	C1	C2	D
				Pilot bore dia.	Min. bore dia.	Max. bore dia.	Pilot bore dia.	Min. bore dia.	Max. bore dia.									
TGK20-A7	15 to 65	340	0.14 to 0.55	8	10	20	15	17	42	79	33.5	88.3	221.8	24.5	14	11.2	100	45.5
TGK30-A7	30 to 147	230	0.14 to 0.55	10	12	30	15	17	60	95	47.8	115.5	290.3	33.8	22	11.7	127	53
TGK45-A7	90 to 392	430	0.14 to 0.55	20	22	45	25	27	74	124	57.2	137.5	334.7	43.2	17	16.8	140	74.4

Model no.	E1	F1	J1	L1	M	N1 Screw dia. × length	O1 Screw dia. × depth	O2	O3	O4	P1 Screw dia. × length	Q Screw dia.*2	Q1 Screw dia.*2	R*2	R1*2	U	U1	Air supply port Y*3	Y1
TGK20-A7	104	61	61	88	30	M5×20	M5×10	21	135°	90°	M4×6	M5	M5	5	8	1.2	1.8	4	21
TGK30-A7	143	84	75	115	45	M6×25	M6×12	23	135°	90°	M5×6	M6	M6	5	12	1.8	2.0	8	23
TGK45-A7	168	106	98	159	60	M8×25	M8×15	34	120°	90°	M5×6	M8	M8	8	15	2.2	2.9	8	34

Model no.	Z		Z1	Z2	Mass*4 kg	Moment of inertia*4 kg·m²	Coupling model no.	X*5	Allowable misalignment*6		
	Screw dia. × depth	Counterbore dia. × depth							Angular (deg.)	Parallel	Axial
TGK20-A7	M4×10	φ5×3.5	15	35	5.5	0.00503	NEF25W	21	2	1.6	±2.8
TGK30-A7	M4×10	φ5×4.5	16.5	45	13.2	0.0256	NEF80W	29.5	2	2.0	±3.6
TGK45-A7	M5×10	φ6×5	20	65	22.9	0.0537	NEF130W	20	2	2.2	±5.0

*1. Contact a Tsubaki representative for use at speeds higher than the maximum rpm.
*2. Tapped holes for set screws are not processed. Dimensions are for reference only.
*3. Y represents the outer diameter of the applicable tube.
*4. Mass and moment of inertia are based on the maximum bore diameter.
*5. Space required for the insertion of a reamer bolt.
*6. The allowable misalignment is the value when the other two misalignments are zero.
Note: The air supply port is a pipe joint applicable to both nylon and urethane tubes.
A limit switch installation example is shown on page 74.

Torque Adjustments

Torque adjustment can be accurately performed by referring to the Torque Correlation Charts and adjusting the pneumatic pressure to the desired torque using the regulator (pressure regulator) to send air to the TGK cylinder. Also, the operating torque can be changed by changing the pneumatic pressure even while the machine is operating.
Operating pneumatic pressure: 0.14 to 0.55 MPa

Note: Make sure that the air supply pressure does not drop below the set pressure.

Size	Min. torque N·m	Max. torque N·m
TGK20	15.0	65.0
TGK30	30.0	147
TGK45	90.0	392

Torque Correlation Charts

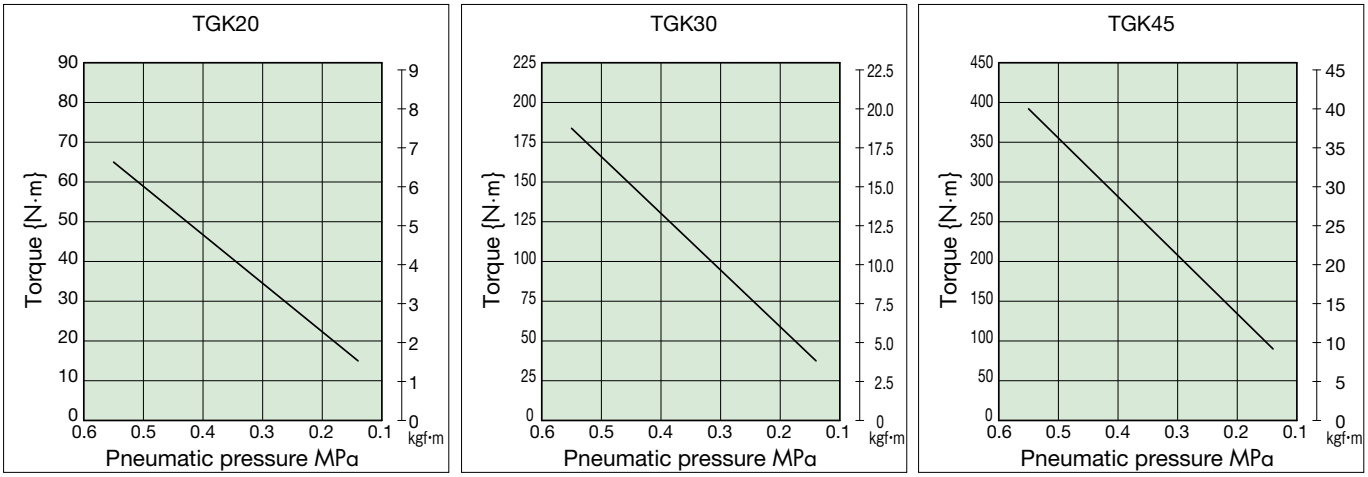

Limit Switch Installation Example (Optional)

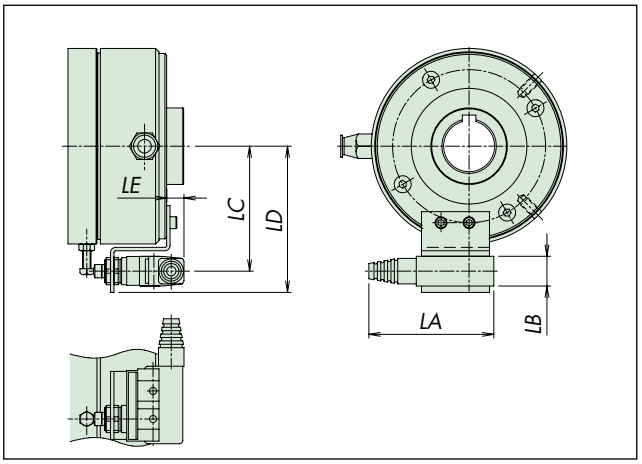

TGK Series with built-in limit switch available upon request.

Size	*LA*	*LB*	*LC*	*LD*	*LE*	Limit switch model no. (Omron)
TGK20	73.5	17.5	59	71.5	16.2	SHL-Q55
TGK30	73.5	17.5	73.5	86	10.2	
TGK45	73.5	17.5	95.5	108.5	–	

Air Control System

Traditional overload protectors have a fixed operating torque that cannot be adjusted during operation. However, the TGK Series has a unique feature that allows the operating torque to be changed during operation by adjusting the pneumatic pressure. This feature makes it possible to protect the machine by setting the torque higher than the starting torque only at start-up and then adjusting it to the optimum value at a later time. (Refer to the figure on the right.)

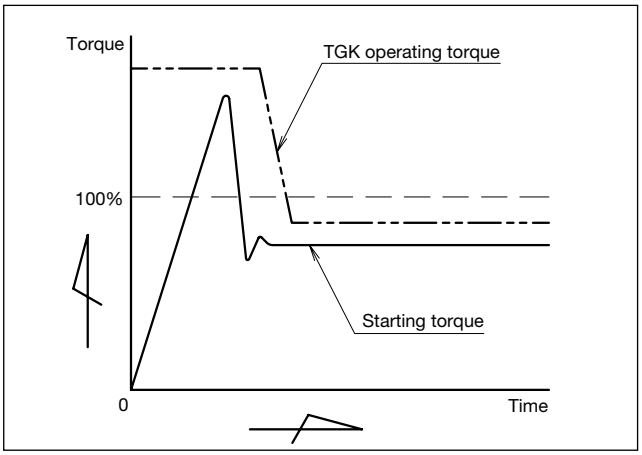

Single Air Control System

This system is for simple torque adjustment.
Torque can be adjusted in the range of 0.14 MPa to 0.55 MPa.

Air device configuration

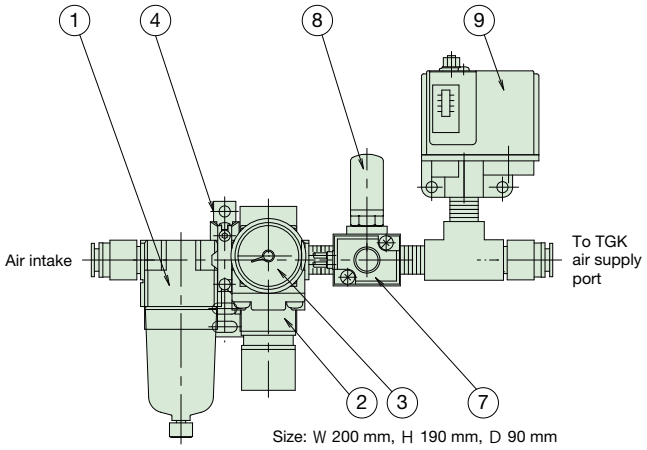

Part no.	Device name	Reference: Model no. (SMC)
1	Air filter	AF20-02-A
2	Regulator	AR20-02-A
3	Pressure gauge	G36-10-01
4	Spacer with bracket	Y200T-A
5	–	–
6	–	–
7	3-port solenoid valve	VT307-1G1-02
8	Silencer	AN20-02
9	Pressure switch	IS3000-02

Electrical diagram

PB1	Motor start button
PB2	Motor stop button
SS1	Selecting switch
SS2	Pressure switch
S1	Solenoid valve

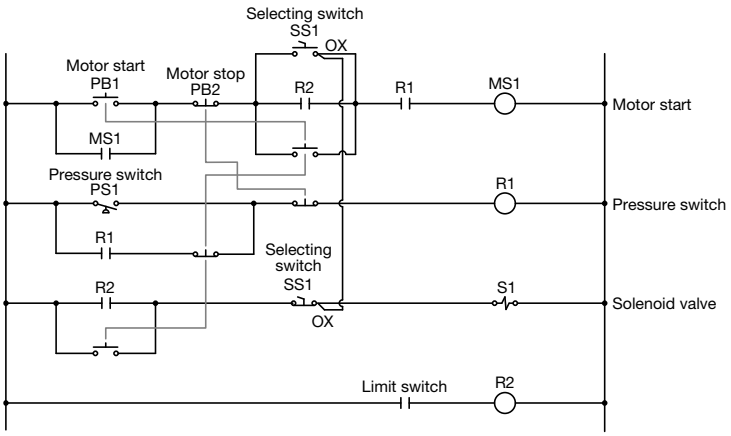

Basic operation

First, make sure the selector switch (SS1) is set to “Air ON” at startup. Press the motor start button (PB1) to start the motor, and the TGK Series will return to the “Clutch ON” state. The limit switch is turned on, motor self-holding is complete, and the motor will continue to rotate even if the motor start button (PB1) is released.

Note: The motor will not start if the motor start button (PB1) is pressed when the pressure switch is off.

The TGK Series sensor target moves at the same time as an overload occurs, and the amount of travel is detected by a limit switch or similar device.
When the limit switch is turned off, the solenoid valve (S1) switches to turn off the self-holding of the motor, and then the motor stops.
In the “Clutch OFF” state, this can be accomplished by turning the selector switch (SS1) to the “Air OFF” position. In the “Air OFF” state, the solenoid valve switches, the air supply to the TGK Series stops, the TGK Series goes to “Clutch OFF,” and the motor continues to rotate without the driving force being transferred to the driven side.

Electrical diagram

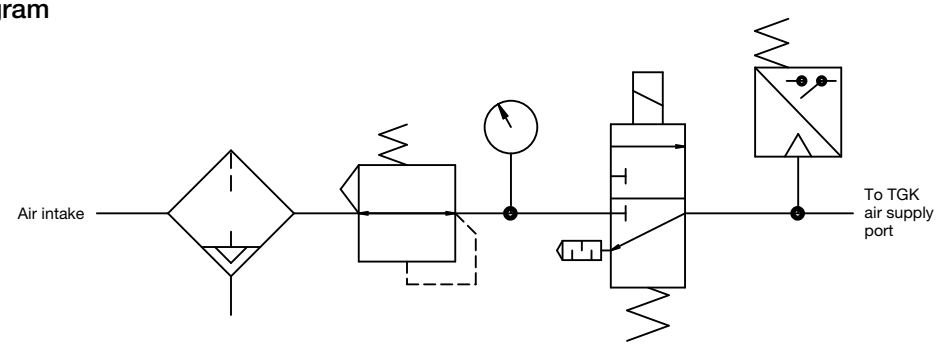

Dual Air Control System

This system uses two regulators. At the time of startup, the regulator set to the higher pressure feeds air to the TGK Series. A timer is used to count several seconds (1 to 10 seconds), and then the system switches to the regulator set to the lower pressure in order to set the torque to the optimal value. Such a system enables various automatic torque adjustments during operation.

Air device configuration

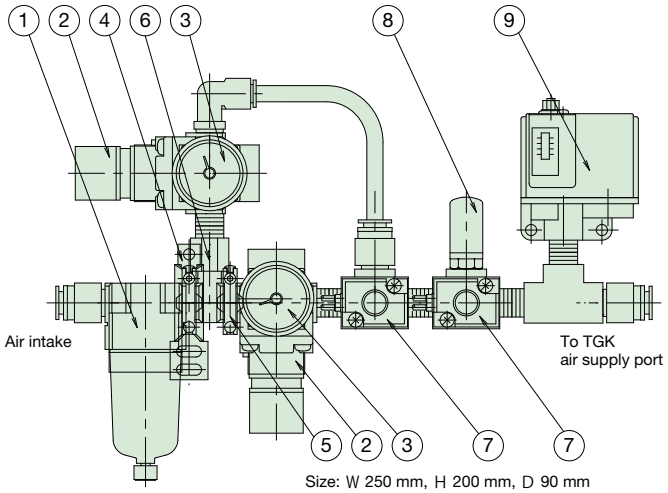

Size: W 250 mm, H 200 mm, D 90 mm

Part no.	Device name	Reference: Model no. (SMC)
1	Air filter	AF20-02-A
2	Regulator	AR20-02-A
3	Pressure gauge	G36-10-01
4	Spacer with bracket	Y200T-A
5	Spacer	Y200-A
6	T-spacer	Y210-02-A
7	3-port solenoid valve	VT307-1G1-02
8	Silencer	AN20-02
9	Pressure switch	IS3000-02

Electrical diagram

PB1	Motor start button
PB2	Motor stop button
SS1	Selecting switch
SS2	Pressure switch
S1	Solenoid valve 1
S2	Solenoid valve 2

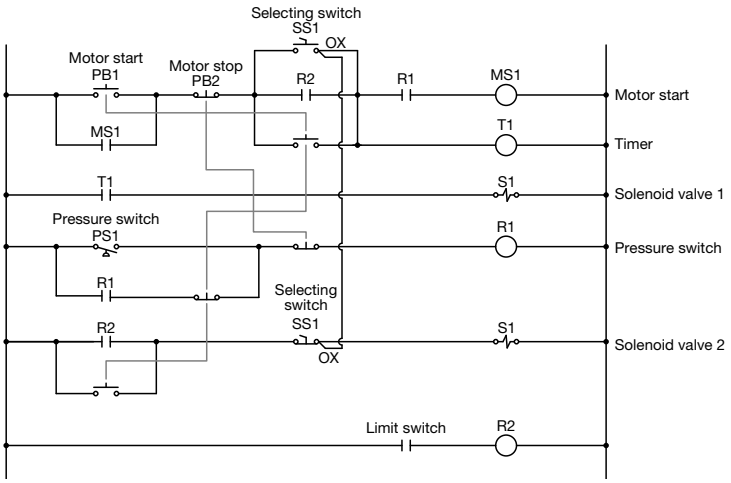

Basic operation

First, make sure the selector switch (SS1) is set to “Air ON” at startup. Press the motor start button (PB1) to start the motor, and the TGK Series will return to the “Clutch ON” state. The limit switch is turned on, motor self-holding is complete, and the motor will continue to rotate even if the motor start button (PB1) is released.

Note: The motor will not start if the motor start button (PB1) is pressed when the pressure switch is off.

The TGK Series sensor target moves at the same time as an overload occurs, and the amount of travel is detected by a limit switch or similar device.
When the limit switch is turned off, the solenoid valve (S1) switches to turn off the self-holding of the motor, and then the motor stops.
In the “Clutch OFF” state, this can be accomplished by turning the selector switch (SS1) to the “Air OFF” position. In the “Air OFF” state, the solenoid valve switches, the air supply to the TGK Series stops, the TGK Series goes to “Clutch OFF,” and the motor continues to rotate without the driving force being transferred to the driven side.

Electrical diagram

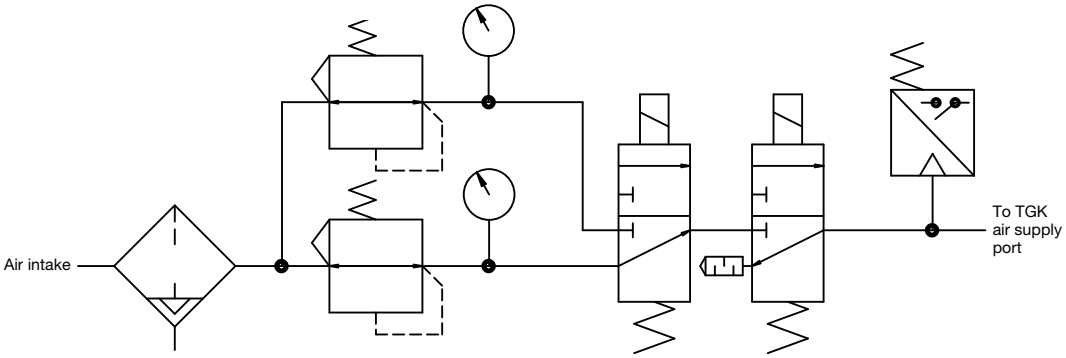

Torque Limiter

Features

Traditional friction-type structure.
Economically priced and easy to use.

Easy torque adjustment

Torque adjustments are done by simply tightening the adjustment nut or bolts. Torque is transmitted by friction between the friction facing and the center member, which ensures that the Torque Limiter slips against overload and protects the machine.

Automatic reset

The Torque Limiter slips under overload and automatically resumes rotation when the overload is removed. There are no spare parts such as shear pins, so minimal effort is required.

Suitable with various drives

Sprockets and gears can be fixed to the center member.

A wide variety of sizes

Standard products are available in a range of capacities for use in any transmission conditions.

Series

Torque Limiter

Once attached to the shaft, torque transmission is conveyed through roller chains, belts, or gears.



Torque Limiter (with pilot bore)

TL10

TL200 to TL20

Torque Limiter with sprocket

Torque Limiter with sprocket and finished bore; torque is factory pre-set.



Torque Limiter with sprocket

TL500

TL200 to TL700

Torque Limiter coupling

A combination Torque Limiter and roller chain coupling.

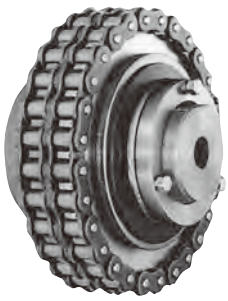

Torque Limiter coupling (with pilot bore)

TL500-C

TL200-C to TL20-C

Structure and Operating Principles



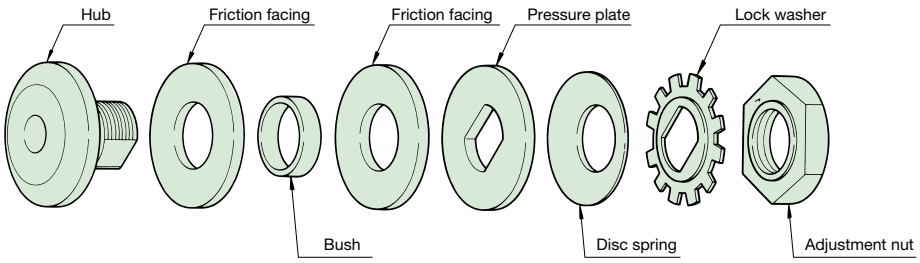

- During normal operation, the friction facings are compressed against the center member (sprockets and gear) by the disc spring. The frictional force transmits rotation when the torque is below the slipping torque.
- When the torque exceeds the slipping torque due to overload, the center member slips between the friction facings. When the overload is removed, the Torque Limiter automatically resets.

Model Numbering Example (See page 86 for finished bore models.)

TL350 – 1 – B6.5

- TL350: Size
- 1: No. of disc springs (1: one; 2: two; 1L: weak spring)
- B6.5: Bush length (blank if there is no bush)

Pilot bores on both sides

TL350 – 2C

- TL350: Size
- 2C: No. of disc springs

Friction facing TL350 A

- TL350: Size
- A: Friction facing

Bush TL350 B 6.5

- TL350: Size
- B: Bush
- 6.5: Bush length

Disc spring TL350 S

- TL350: Size
- S: Disc spring (LS: weak spring)

Using the Torque Limiter

Before installing a pilot-bore Torque Limiter to the shaft, it is required to finish the bore and keyway, fabricate the center member, and set the torque.

- See page 85 for Torque Limiter selection and center member selection/machining.
- Before assembly, the hub, friction facings, pressure plate, and center member (sprocket and gears) should be free of oil, grease, dirt, and rust.
- See page 83 for torque setting.
- Reversing the direction of rotation will cause backlash. Use the Shock Guard TGX Series for machines where backlash is not allowed.
- The friction coefficient affects the slipping torque. To prevent the torque from decreasing, keep the friction facings clean and free of water and oil. Overtightening the bolts can increase the load on the friction facings through the disc springs, which could cause the friction facings to crack.
- If the rpm is too high, the friction facings may overheat and carbonize, resulting in a loss of strength. To prevent this, do not use the product at speeds above the maximum speed.
- Using the Torque Limiter at extremely low speeds of 5 r/min or less may cause the slipping torque to decrease. Contact a Tsubaki representative for extremely low-speed applications.

Transmission Capacity and Dimensions

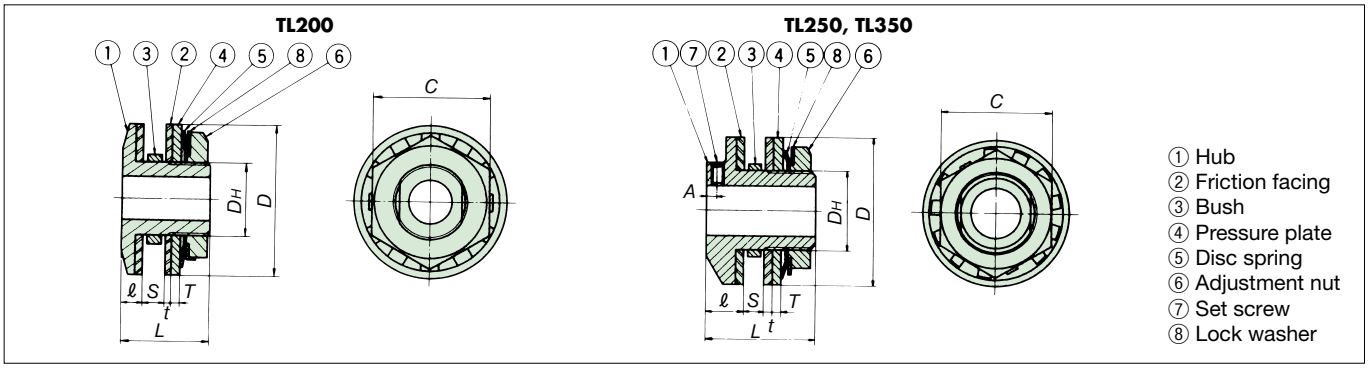

• TL200 does not have a tapped hole for the set screw.
• TL200-1L, TL250-1L, and TL350-1L have a spacer between the disc spring and lock washer.

Unit: mm

Model no.	Torque range N·m	Max. rpm	Pilot bore dia.	Min. bore dia.	Max. bore dia.	Bush length	Bush outer dia.	Center member bore dia.	Dimensions D	DH	L	ℓ	T	t	S max.	A	C	Adjustment nut dia. × pitch	Set screw dia.	Mass kg
TL200-1L	1.0 to 2.0	1800	7	9	14	3.8 6.0	30	$30^{+0.03}_{0}$	50	24	29	6.5	2.6	2.5	7	—	38	M24×1.0	—	0.3
TL200-1	2.9 to 9.8																			
TL200-2	6.9 to 20																			
TL250-1L	2.9 to 6.9		10	12	22	4.5 6.5	41	$41^{+0.05}_{0}$	65	35	48	16	4.5	3.2	9	4	50	M35×1.5	M5	0.5
TL250-1	6.9 to 27																			
TL250-2	14 to 54																			
TL350-1L	9.8 to 20		17	18	25	4.5 6.5 9.5	49	$49^{+0.05}_{0}$	89	42	62	19	4.5	3.2	16	6	63	M42×1.5	M6	1.2
TL350-1	20 to 74																			
TL350-2	34 to 149																			

Note: 1. Pilot bore stock models are shown in bold, and non-bold models are made to order.
2. The set screw is included in the shipment.
3. The TL200 cannot be mounted to the shaft using a hexagon socket head set screw. Use a retaining ring or end plate.
4. The torque values above are values for continuous slipping torque, intended for protecting the equipment from overload.
5. See page 83 for bush length selection.
6. Mass is based on the maximum bore diameter.
7. The slipping torque may decrease when the Torque Limiter is used at low speeds of 5 r/min or less. Contact a Tsubaki representative for extremely low-speed applications.

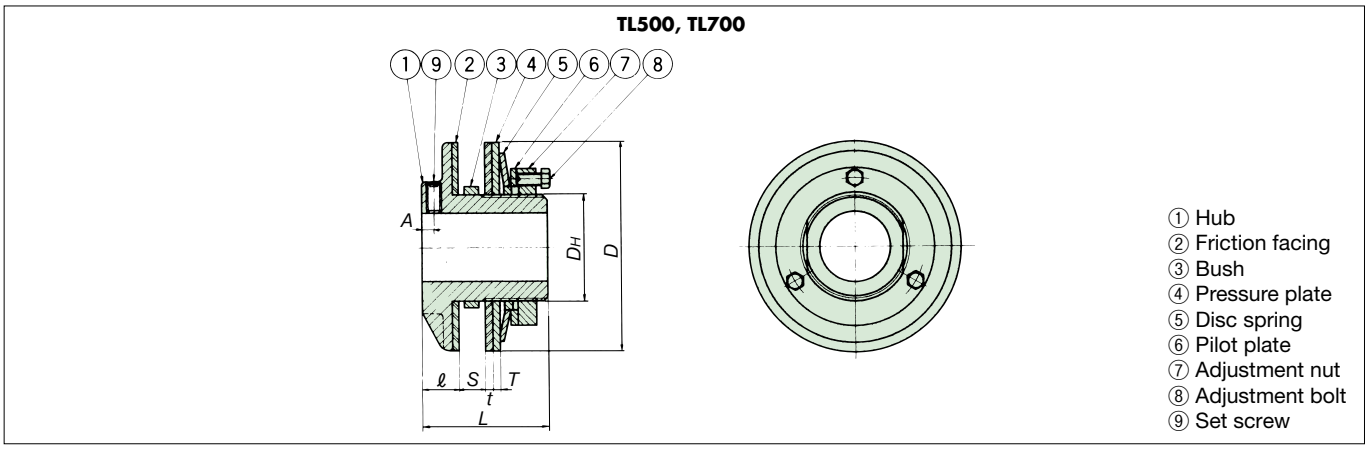

Unit: mm

Model no.	Torque range N·m	Max. rpm	Pilot bore dia.	Min. bore dia.	Max. bore dia.	Bush length	Bush outer dia.	Center member bore dia.	Dimensions D	DH	L	ℓ	T	t	S max.	A	Adjustment nut dia. × pitch	Adjustment bolt dia. × pitch	Set screw dia.	Mass kg
TL500-1L	20 to 49	1800	20	22	42	6.5 9.5	74	$74^{+0.05}_{0}$	127	65	76	22	6	3.2	16	7	M65×1.5	M8×1	M 8	3.1
TL500-1	47 to 210																			
TL500-2	88 to 420																			
TL700-1L	49 to 118		30	32	64	9.5 12.5	105	$105^{+0.05}_{0}$	178	95	98	24	8	3.2	29	8	M95×1.5	M10×1.25	M10	7.0
TL700-1	116 to 569																			
TL700-2	223 to 1080																			

Note: 1. Pilot bore stock models are shown in bold, and non-bold models are made to order.
2. The set screw is included in the shipment.
3. The torque values above are values for continuous slipping torque, intended for protecting the equipment from overload.
4. See page 83 for bush length selection.
5. Mass is based on the maximum bore diameter.
6. The slipping torque may decrease when the Torque Limiter is used at low speeds of 5 r/min or less. Contact a Tsubaki representative for extremely low-speed applications.

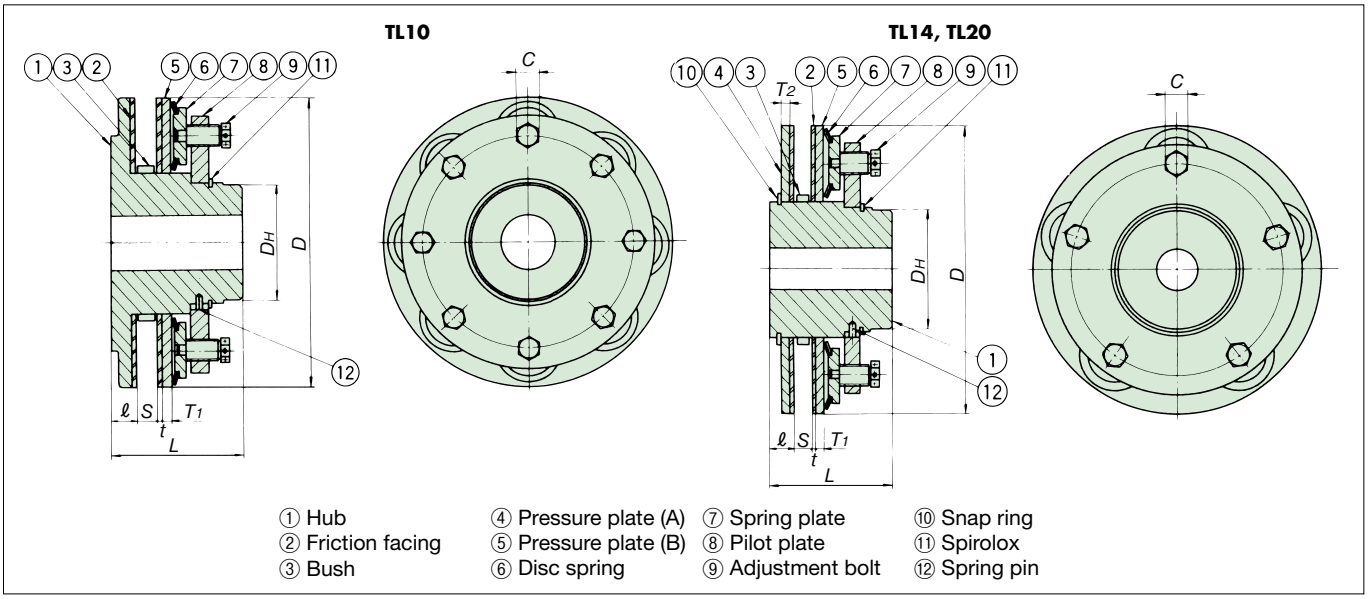

Note: The TL20 has six adjustment bolts. Refer to the standard drawing.

Unit: mm

Model no.	Torque range N·m	Max. rpm	Pilot bore dia.	Min. bore dia.	Max. bore dia.	Bush length	Bush outer dia.	Center member bore dia.	Dimensions									Mass kg
									D	D_H	L	ℓ	T_1	T_2	t	S max.	C	Adjustment bolt dia. × pitch	
TL10-16	392 to 1270	1000	30	32	72	12.5 15.5 19.5	135	$135^{+0.07}_{0}$	254	100	115	23	8.5	–	4.0	24	19	M18×1.5	19
TL10-24	588 to 1860																		
TL14-10	882 to 2660	500	40	42	100	15.5 19.5 23.5	183	$183^{+0.07}_{0}$	356	145	150	31	13	13	4.0	29	27	M26×1.5	44
TL14-15	1960 to 3920																		
TL20-6	2450 to 4900		50	52	130	15.5 19.5 23.5	226	$226^{+0.07}_{0}$	508	185	175	36	15	18	4.0	31	36	M32×1.5	99
TL20-12	4610 to 9310																		

Note: 1. All models are made to order.
2. Contact a Tsubaki representative if you need a Torque Limiter in sizes above TL20-12.
3. The torque values above are values for continuous slipping torque, intended for protecting the equipment from overload.
4. See page 83 for bush length selection.
5. Mass is based on the maximum bore diameter.
6. The slipping torque may decrease when the Torque Limiter is used at low speeds of 5 r/min or less. Contact a Tsubaki representative for extremely low-speed applications.

TL200 to TL350

Without bush	With bush
Model no.	Model no.
TL200-1L	TL200-1L-B3.8
TL200-1	TL200-1L-B6.0
TL200-2	TL200-1-B3.8
TL250-1L	TL200-1-B6.0
TL250-1	TL200-2-B3.8
TL250-2	TL200-2-B6.0
TL350-1L	TL250-1L-B4.5
TL350-1	TL250-1L-B6.5
TL350-2	TL250-1-B4.5
	TL250-1-B6.5
	TL250-2-B4.5
	TL250-2-B6.5
	TL350-1L-B4.5
	TL350-1L-B6.5
	TL350-1L-B9.5
	TL350-1-B4.5
	TL350-1-B6.5
	TL350-1-B9.5
	TL350-2-B4.5
	TL350-2-B6.5
	TL350-2-B9.5

TL500 to TL700

Without bush	With bush
Model no.	Model no.
TL500-1L	TL500-1L-B6.5
TL500-1	TL500-1L-B9.5
TL500-2	TL500-1-B6.5
TL700-1L	TL500-1-B9.5
TL700-1	TL500-2-B6.5
TL700-2	TL500-2-B9.5
	TL700-1L-B9.5
	TL700-1L-B12.5
	TL700-1-B9.5
	TL700-1-B12.5
	TL700-2-B9.5
	TL700-2-B12.5

TL10 to TL20

Without bush	With bush
Model no.	Model no.
TL10-16	TL10-16-B12.5
TL10-24	TL10-16-B15.5
TL14-10	TL10-16-B19.5
TTL14-15	TL10-24-B12.5
TL20-6	TL10-24-B15.5
TL20-12	TL10-24-B19.5
	TL14-10-B15.5
	TL14-10-B19.5
	TL14-10-B23.5
	TL14-15-B15.5
	TL14-15-B19.5
	TL14-15-B23.5
	TL20-6-B15.5
	TL20-6-B19.5
	TL20-6-B23.5
	TL20-12-B15.5
	TL20-12-B19.5
	TL20-12-B23.5

Finished-bore Torque Limiter with Sprocket



■ Torque pre-set at the Tsubaki factory

Note: Torque Limiters with sprocket and finished bore only.

■ Assembled with sprockets

Standardized with sprockets for sizes TL200 to TL700.

■ Finished bore and keyway

Standardized finished bore and keyway for sizes TL200 to TL700.

■ Easy torque setting

The adjustment nut or bolts are pre-set at 120°, making it easy for the customer to set the torque.

Note: Torque setting is performed using a static torque tester.

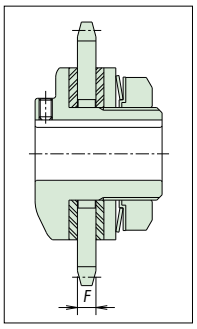

Sprocket and Bore Finishing Dimensions

Torque Limiter size	Finished bore dia. (mm) TL200 TH□□JD0 TL250 to 700 TH□□JD1	Sprocket					Mass (kg)
		Type	*F* (mm)	Bush len. (mm)	Number of teeth (stock models)	Number of teeth (MTO models)	
TL200	9,10,12,14	RS35	$4.3^{0}_{-0.25}$	3.8	20,21,22,23,24,25,26,28,30	–	0.4
		RS40	$7^{0}_{-0.35}$	6.0	16,17,18,19,20,21,22,24,25,26	–	0.5
TL250	12,14,15,16,17, 18,19,20,22	RS40	$7^{0}_{-0.35}$	6.5	22,23,24,25,26,27,28,30	21,32	0.9
		RS50	$7^{0}_{-0.25}$	6.5	18,19,20,21,22,23,24,25,26,27,28	17	1.0
TL350	18,19,20,22,24,25	RS40	$7^{0}_{-0.35}$	6.5	26,27,28,30,32,34,35,36,38	40,42,45	1.8
		RS50	$7^{0}_{-0.25}$	6.5	22,23,24,25,26,27,28,30,32	21,34,35,36	1.9
		RS60	$10^{0}_{-0.30}$	9.5	–	18,19,20,21,22,23,24,25,26,27,28,30	2.1
TL500	22,24,25,28,30,32, 34,35,36,38,40,42	RS50	$7^{0}_{-0.25}$	6.5	30,32,34,35,36,38,40,42,45	48,50	4.6
		RS60	$10^{0}_{-0.30}$	9.5	25,26,27,28,30,32,34,35,36,38	40	5.0
		RS80	$13^{0}_{-0.30}$	9.5	–	19,20,21,22,23,24,25,26,27,28,30	5.5
TL700	32,34,35,36,38,40, 42,45,46,48,50,55, 60	RS60	$10^{0}_{-0.30}$	9.5	35,36,38,40,42,45,48,50,54	–	12
		RS80	$13^{0}_{-0.30}$	12.5	26,27,28,30,32,34,35,36,38	–	12
		RS100	$16.5^{0}_{-0.30}$	12.5	–	21,22,23,24,25,26,27,28,30	14

Note: 1. For sprockets with hardened teeth and finished bore diameters other than those listed above, contact a Tsubaki representative.
2. Sprocket thickness *F* on stock models differs from MTO models.
3. See pages 79 and 80 for Torque Limiter dimensions.
4. Mass is based on the maximum bore diameter and minimum number of sprocket teeth.
5. TL200 cannot be mounted to the shaft using a set screw. Use a snap ring or end plate.

■ Torque Setting

- Torque is set at 120° on the Tightening Amount–Torque Correlation Charts. Set the torque based on 120° with the adjusting nut or bolts before use.

■ Bore Diameter and Keyway Specifications

- The bore tolerance is H7.
- The keyway is new JIS (JIS B 1301-1996) normal type.
- Set screws are included in the shipment.

■ Chamfer and Finish

Bore dia.	Chamfer dimensions
25 or less	C0.5
50 or less	C1
125 or less	C1.5
More than 125	C2

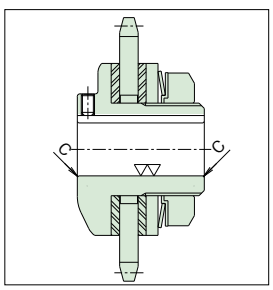

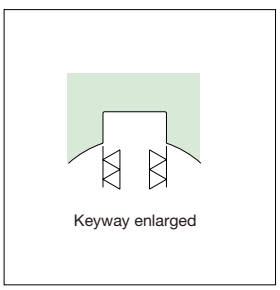

Torque Limiter Coupling

Torque Limiter coupling is a flexible coupling that uses a Torque Limiter and special sprockets connected by two rows of RS roller chains. The coupling is easy to center and simple to operate. In addition, the Torque Limiter acts as an automatic safety device to protect the machine in the event of overload.

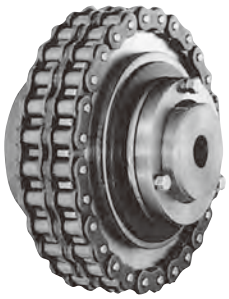

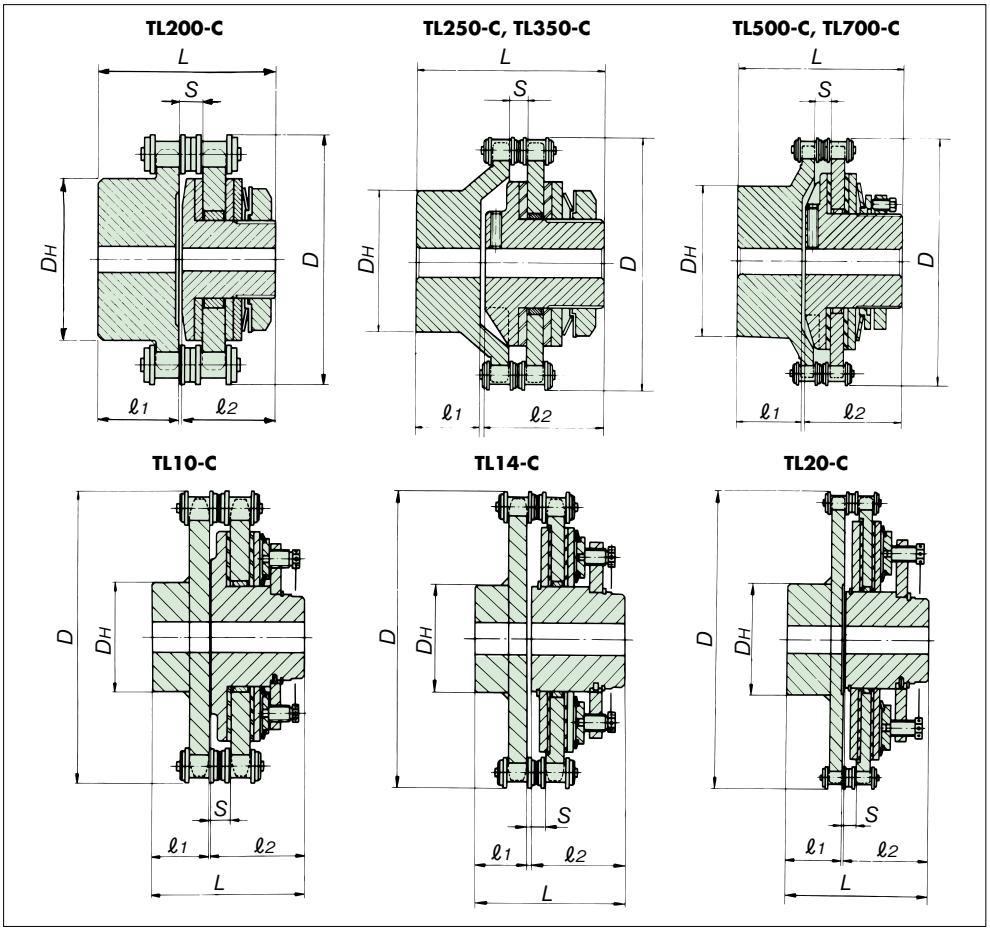

TL200-1LC, TL250-1LC, and TL350-1LC have a spacer between the disc spring and lock washer.

Unit: mm

Model no.	Torque range N·m	Max. rpm*	Pilot bore dia.		Min. bore dia.		Max. bore dia.		Sprocket	Dimensions						Mass kg
			Coupling side	Torque Limiter side	Coupling side	Torque Limiter side	Coupling side	Torque Limiter side		D	D_H	L	ℓ_1	ℓ_2	S	
TL200-1LC	1.0 to 2.0	1200	8	7	10	9	31	14	RS 40-16T	76	50	55	24	29	7.5	1.0
TL200-1C	2.9 to 9.8															
TL200-2C	6.9 to 20															
TL250-1LC	2.9 to 6.9	1000	13	10	15	12	38	22	RS 40-22T	102	56	76	25	48	7.4	2.0
TL250-1C	6.9 to 27															
TL250-2C	14 to 54															
TL350-1LC	9.8 to 20	800	13	17	15	18	45	25	RS 50-24T	137	72	103	37	62	9.7	5.0
TL350-1C	20 to 74															
TL350-2C	34 to 149															
TL500-1LC	20 to 49	500	18	20	20	22	65	42	RS 60-28T	188	105	120	40	76	11.6	12
TL500-1C	47 to 210															
TL500-2C	88 to 420															
TL700-1LC	49 to 118	400	23	30	25	32	90	64	RS 80-28T	251	150	168	66	98	15.3	28
TL700-1C	116 to 569															
TL700-2C	223 to 1080															
TL10-16C	392 to 1270	300	33	30	35	32	95	72	RS140-22T	355	137	189	71	115	26.2	60
TL10-24C	588 to 1860															
TL14-10C	882 to 2660	200	38	40	40	42	118	100	RS160-26T	470	167	235	80	150	30.1	125
TL14-15C	1960 to 3920															
TL20-6C	2450 to 4900	140	43	50	45	52	150	130	RS160-36T	631	237	300	120	175	30.1	251
TL20-12C	4610 to 9310															

Note: 1. Pilot bore stock models are shown in bold, and non-bold models are made to order.
2. TL200 to TL700 sizes with hardened teeth sprockets can be used up to 1800 r/min. TL10 to TL20 sizes can be used up to 800 r/min.
3. Contact a Tsubaki representative for sizes above TL20-12C.
4. Mass is based on the maximum bore diameter.

■ Set Screw Position and Size

Torque Limiter		Torque Limiter side		Torque Limiter (coupling type)	
		Set screw	Set screw position *(L1)*	Set screw	Set screw position *(L2)*
TL200	TL200-C	–	–	M 5× 5	8
TL250	TL250-C	M 5× 8	44	M 5× 5	12
TL350	TL350-C	M 6×12	56	M 6× 6	18
TL500	TL500-C	M 8×20	69	M 8× 8	20
TL700	TL700-C	M10×20	90	M10×10	33
TL10	TL10-C	M 8× 8	10	M 8× 8	15
TL14	TL14-C	M10×10	12	M10×10	20
TL20	TL20-C	M14×14	15	M14×14	35

Note: The above values are for reference only. They may vary depending on the bore diameter.

■ Chamfer and Finish

Bore dia.	Chamfer dimensions
25 or less	C0.5
50 or less	C1
125 or less	C1.5
More than 125	C2

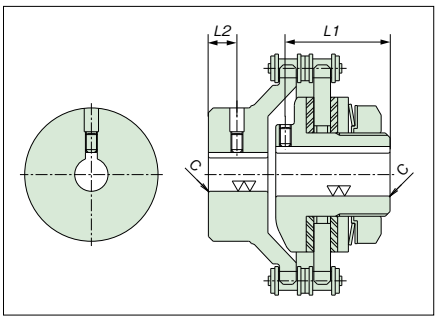

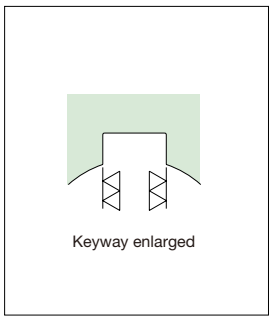

Selection

When using the Torque Limiter with human transportation or lifting devices, take the necessary precautions with equipment to avoid serious injury or death from falling objects.

1. To set the Torque Limiter slipping torque, consider the strength and load of the machine, as well as other relevant information. The Torque Limiter should be set at the point where it should not go any higher. If the limit value is not clear, calculate the torque based on the rated output power of the motor and the rpm where the torque limiter is installed, and then multiply the result by 1.5 to 2.0 times. This is the Torque Limiter slipping torque.
2. When selecting a Torque Limiter, make sure that the slipping torque falls within its rated torque range.
3. Check the dimensions table to make sure that the Torque Limiter maximum bore is greater than the mounting shaft bore. In cases where the mounting shaft bore exceeds the limit, it is recommended to use a Torque Limiter one size larger.
4. Determine the appropriate bushing length based on the thickness of the center member in the Torque Limiter. Refer to the dimensions tables for the specified bushing length. Select one or a combination of bushings from the table, making sure the total length does not exceed the thickness of the center member. Select the longest combination within that thickness limit.

Torque Setting

Set the Torque Limiter slipping torque by tightening the adjustment nuts or bolts.

1. After mounting the Torque Limiter onto the equipment, perform several test runs to find the optimal position by gradually tightening the adjustment nuts/bolts.
   To determine the slipping torque for a given tightening amount of the adjustment nut/bolt, use the Tightening Amount–Torque Correlation Charts below. However, the torque may vary depending on the condition of the friction surfaces and other factors. The chart is a guide only, and the best way to find the correct tightening amount for your machine is to perform a test run with the adjustment nut/bolt slightly loose and then gradually tighten it to find the optimal position.
   If a stable torque is required, tighten the adjustment nut/bolt by hand until it is fully seated, then tighten an additional 60 degrees with a wrench. Then allow the nut/bolt to slip approximately 500 turns. If the speed is high, divide the 500 turns into several intervals.
2. Torque Limiters can be supplied with a center member and pre-set torque, but the shaft bore must be finished.

Tightening Amount–Torque Correlation Charts

Zero point (0) is the state where the adjusting nut or bolts are hand-tightened and the disc springs are fixed.

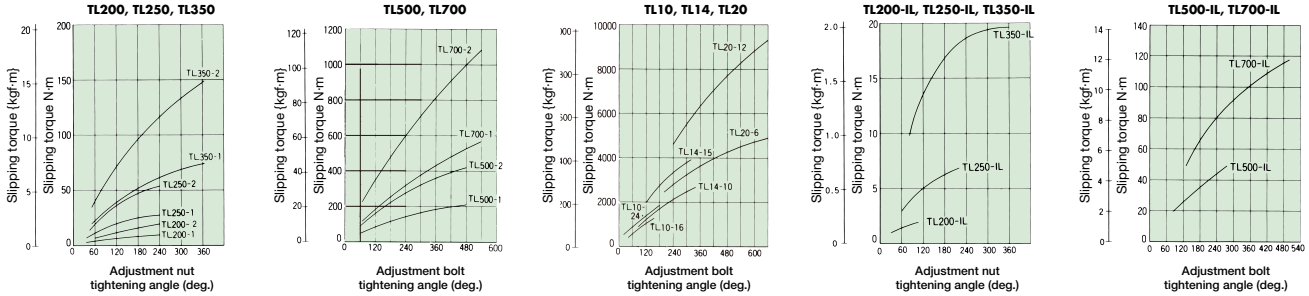

Center Member Selection and Manufacture

Sprockets and gears can be used as a center member with the Torque Limiter. If the customer intends to select or manufacture the center members by themselves, take the following precautionary steps.

1. The Torque Limiter's outer diameter (*D*) limits the minimum diameter of the center member. When using a sprocket with a chain drive, refer to page 85 for the minimum number of teeth.
2. Finish the friction surface of the center member (both sides) to 3S to 6S.
3. For the bore diameter of the center member, machine it to 3S to 6S within the center member bore diameter tolerance from the dimensions table.
4. The thickness where the center member is inserted should be within the S dimension in the dimensions table.

Torque Limiter Operation Detection

Torque Limiter slips and protects the machine when an overload occurs. However, if the driving source is not stopped, the Torque Limiter will continue to slip, which can cause abnormal wear and excessive heat generation on the friction facings. In such situations, it is essential to shut down the drive source immediately. A proximity switch and digital tachometer can be used to detect Torque Limiter slippage and stop the drive source. Here are examples of how this method can be implemented:

■ Installation Examples

Case 1 When the driven side experiences overload and the Torque Limiter's center member stops

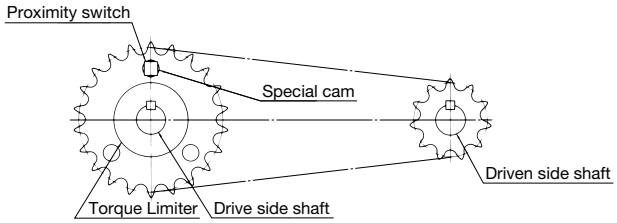

Case 2 When the driven side experiences overload and the Torque Limiter stops

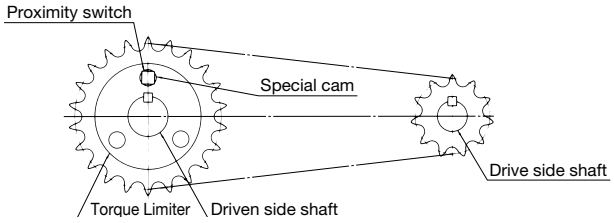

Case 3 When the Torque Limiter is used with a coupling and the center member stops due to an overload

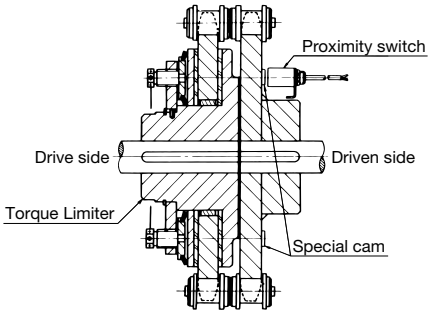

Case 4 When the Torque Limiter is used with a coupling and the Torque Limiter stops due to an overload

Avoid case 4 as much as possible because installing the special cams is difficult. When using the Torque Limiter with a coupling, use case 3.

By selecting the number of special cams as shown in the table to the right, slips can be detected within approximately 1 to 10 seconds based on the detection rotational speed.

Number of Special Cams and Detection Rotational Speed

Number of special cams	Detection rotational speed range rpm	Number of special cams	Detection rotational speed range rpm
1	6 to 60	6	1.0 to 10
2	3 to 30	7	0.85 to 8.5
3	2 to 20	8	0.75 to 7.5
4	1.5 to 15	9	0.67 to 6.7
5	1.2 to 12	10	0.6 to 6.0

Note: In the case of 0.6 rpm and slower, the range is that of 6 to 60 rpm divided by the number of special cams.

■ Electrical Schematic Diagram (reference)

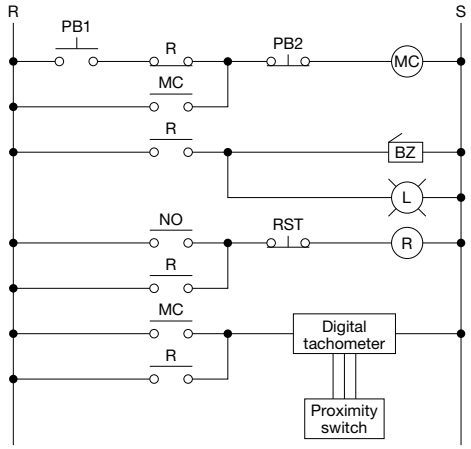

PB1: Motor start button
PB2: Motor stop button
RST: BZ, L reset button
MC: Electromagnetic contactor for motor
R: Auxiliary relay
NO: Digital tachometer output "a" contact
BZ: Buzzer
L: Lamp

Digital tachometer
Omron H7CC-R11

Proximity switch
Omron TL-N5ME2

Note: We recommend the above Omron digital tachometers and proximity switches. For more information, refer to Omron Corporation catalogs.

■ Special Cam Dimensions and Installation

The special cam is fixed by a screw on the driven side.
Use a screw lock to prevent loosening.

■ Special Cam Reference Drawing

Note: Special cam must be prepared by the customer.

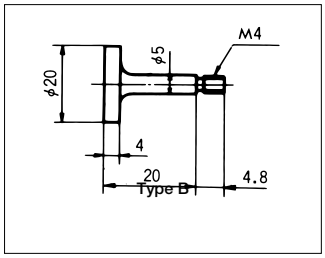

■ Sprockets for the Center Member

When using the sprocket as a center member, refer to the notes below.
In the table below, the sprocket is used as a center member for the chain drive.

1. Minimum number of teeth in which the chain does not interfere with the special cam (as with the reference drawings of the previous page) when using installation cases 1 and 2 of the previous page.
2. Minimum number of teeth in which the chain does not interfere with the friction facings of the Torque Limiter.
3. Bush length
4. Sprocket bore diameter (center member bore diameter)

Torque Limiter only and when installing special cams as shown in case 2 on the previous page

Torque Limiter model no.	Sprocket bore dia. (center member bore dia.)	Min. number of sprocket teeth																	
		RS35		RS40		RS50		RS60		RS80		RS100		RS120		RS140		RS160	
		Min. number of teeth	Bush length	Min. number of teeth	Bush length	Min. number of teeth	Bush length	Min. number of teeth	Bush length	Min. number of teeth	Bush length	Min. number of teeth	Bush length	Min. number of teeth	Bush length	Min. number of teeth	Bush length	Min. number of teeth	Bush length
TL200	30 $^{+0.03}_{0}$	△ 20	3.8	16	6														
TL250	41 $^{+0.05}_{0}$			20	6.5	17	6.5												
TL350	49 $^{+0.05}_{0}$			26	6.5	21	6.5	18	9.5	15	9.5								
TL500	74 $^{+0.05}_{0}$					△ 29 (30)	6.5	25	9.5	19	9.5								
TL700	105 $^{+0.05}_{0}$							△ 33 (35)	9.5	26	12.5	21	12.5	18	12.5				
TL10	135 $^{+0.07}_{0}$											△ 29 (30)	12.5	24	15.5	△ 22	19.5		
TL14	183 $^{+0.07}_{0}$											△ 39 (40)	15.5	△ 33 (35)	15.5	△ 29	19.5	△ 26	23.5
TL20	226 $^{+0.07}_{0}$											△ 54	15.5	△ 46 (60)	15.5	△ 40	19.5	△ 35	23.5

Note: 1. Those marked with " △ " are not standard type A sprockets. When using a standard stock sprocket, use the number of teeth in parenthesis ( ).
2. Bush length is for reference.

When installing special cams as shown in case 1 on the previous page

Torque Limiter model no.	Sprocket bore dia. (center member bore dia.)	Min. number of sprocket teeth																	
		RS35		RS40		RS50		RS60		RS80		RS100		RS120		RS140		RS160	
		Min. number of teeth	Bush length	Min. number of teeth	Bush length	Min. number of teeth	Bush length	Min. number of teeth	Bush length	Min. number of teeth	Bush length	Min. number of teeth	Bush length	Min. number of teeth	Bush length	Min. number of teeth	Bush length	Min. number of teeth	Bush length
TL200	30 $^{+0.03}_{0}$	△ 25	3.8	19	6.0														
TL250	41 $^{+0.05}_{0}$			24	6.5	20	6.5												
TL350	49 $^{+0.05}_{0}$			30	6.5	24	6.5	21	9.5	17	9.5								
TL500	74 $^{+0.05}_{0}$					32	6.5	△ 28 (30)	9.5	21	9.5								
TL700	105 $^{+0.05}_{0}$							36	9.5	△ 28 (30)	9.5	△ 23 (24)	12.5	20	12.5				
TL10	135 $^{+0.07}_{0}$											△ 31 (32)	12.5	26	15.5	△ 23	19.5		
TL14	183 $^{+0.07}_{0}$											△ 41 (45)	15.5	35	15.5	△ 30	19.5	△ 27	23.5
TL20	226 $^{+0.07}_{0}$											△ 56 (60)	15.5	△ 47 (60)	15.5	△ 41	19.5	△ 36	23.5

Note: 1. Those marked with " △ " are not standard type A sprockets. When using a standard stock sprocket, use the number of teeth in parenthesis ( ).
2. Bush length is for reference.

New Finished Bore Torque Limiter TL and Coupling Type TL-C

New model numbering **As of April 2, 2018**

Model Numbering Example

■ Single-unit type

TL250-2-TH20JD1

Series	Size	No. of disc springs	Torque Limiter side	Bore tolerance	Bore dia. (1 mm increments)	Keyway tolerance	Set screw position (seen from adjustment nut side)
TL	200 250 350 500 700 * 10 14 20	TL200 to TL700 1L·1·2 TL10 16·24 TL14 10·15 TL20 6·12	T	F : F7 G : G7 H : H7 J : JS7 P : P7 M : M7 N : N7 K : K7 R : R7	Size Min. to max 200: 9 to 14 250: 12 to 22 350: 18 to 25 500: 22 to 42 700: 32 to 64 10: 32 to 72 14: 42 to 100 20: 52 to 130	J: New JIS Js9 P: New JIS P9 F: Old JIS F7 E: Old JIS E9 • Old JIS keys ϕ9 or smaller are not supported.	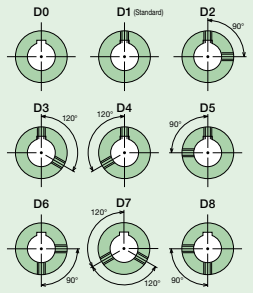 • TL200 is limited to D0. TL250 to TL700 are limited to D1, D3, and D4.

■ Coupling type

TL250-2C-TH18JD1XCH30JD1-N49

Series Size	Coupling type	Torque Limiter side, bore tolerance, bore dia., keyway tolerance, set screw position	Coupling side	Bore tolerance	Bore dia. (1 mm increments)	Keyway tolerance	Set screw position (seen from hub end)	Torque range
Same as single-unit type	C	Same as single-unit type TR for pilot bore	C	F : F7 G : G7 H : H7 J : JS7 P : P7 M : M7 N : N7 K : K7 R : R7	Size Min. to max 200: 10 to 31 250: 15 to 38 350: 15 to 45 500: 20 to 65 700: 25 to 90 10: 35 to 95 14: 40 to 118 20: 45 to 150	J: New JIS Js9 P: New JIS P9 F: Old JIS F7 E: Old JIS E9	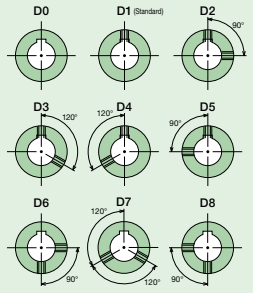	Size N·m 200: 1.0 to 20 250: 2.9 to 54 350: 9.8 to 149 500: 20 to 420 700: 49 to 1080 10: 392 to 1860 14: 882 to 3920 20: 2450 to 9310 • Torque less than 10 N·m is shown to one decimal place. • Specify torque range only if required.
				Pilot bore: R				

■ With sprocket

TL250-2-04022-TH20JD1-N49

Series	Size	No. of disc springs	Sprocket model no.	Torque Limiter side	Bore tolerance	Bore dia. (1 mm increments)	Keyway tolerance	Set screw position (seen from adjustment nut side)	Torque range
TL	200 250 350 500 700	TL200 to TL700 1L 1 2	See p.81	T	F : F7 G : G7 H : H7 J : JS7 P : P7 M : M7 N : N7 K : K7 R : R7	Size Min. to max 200: 9 to 14 250: 12 to 22 350: 18 to 25 500: 22 to 42 700: 32 to 64	J: New JIS Js9 P: New JIS P9 F: Old JIS F7 E: Old JIS E9 • Old JIS keys ϕ9 or smaller are not supported.	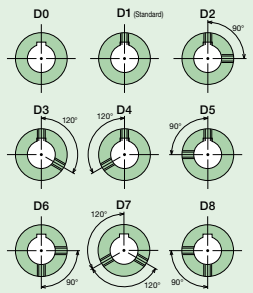 • TL200 is limited to D0. TL250 to TL700 are limited to D1, D3, and D4.	Size N·m 200: 1.0 to 20 250: 2.9 to 54 350: 9.8 to 149 500: 20 to 420 700: 49 to 1080 • Torque less than 10 N·m is shown to one decimal place. • Specify torque range only if required.
					Pilot bore: R				

MEMO

TORQUE KEEPER
MINI KEEPER





Torque Keeper **TFK Series** ------ **p89 to p102**

Mini Keeper **MK Series** --------**p103 to p107**

Torque Keeper TFK Series

Features

Slip clutch and brake that uses fine chemical fibers for the friction facings

Long life
Special fine chemical fibers are used for the friction facings, so much longer life can be expected when compared to other brake linings.

Stable slipping torque
Torque fluctuation is very small, so stable torque can be transmitted.

Constant torque repeatability
Stable torque transmission even with highly frequent repeated slippage.

Lightweight
Thanks to an aluminum AF flange, the Torque Keeper is light in weight.

Compact
Very compact compared to other braking devices and allows significant space savings.

Wide torque range
Each size has a wide torque range.

Easy torque adjustment
Easy-to-read torque scales make torque setting easy.

Easy to handle
Operation is easy thanks to the easy-to-use adjustment nut.

No need to lubricate
Lubrication and cooling are not needed.



Torque Keeper

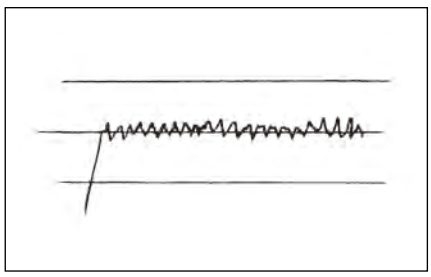

Conventional brake

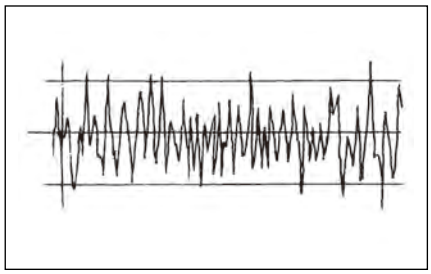

Tsubaki comparison; same torque range

Intermittent slipping

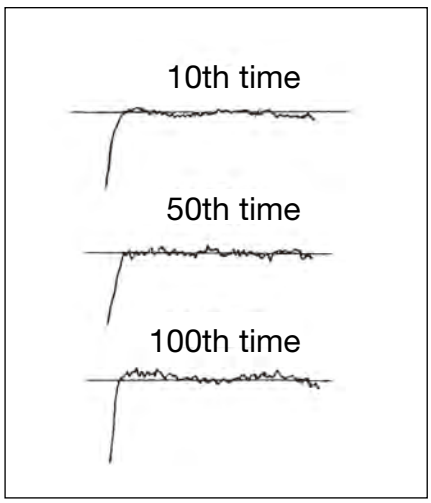

Lasts long, stable, and easy to use

By using fine chemical fibers, the Torque Keeper can achieve a longer product life than brakes using conventional brake lining.
The Torque Keeper has been designed with ease of use in mind: wear-resistant design, a torque scale, and lighter weight.
We recommend using the Torque Keeper in the brake mechanisms of all kinds of industrial equipment, such as accumulation conveyors and automated machinery.

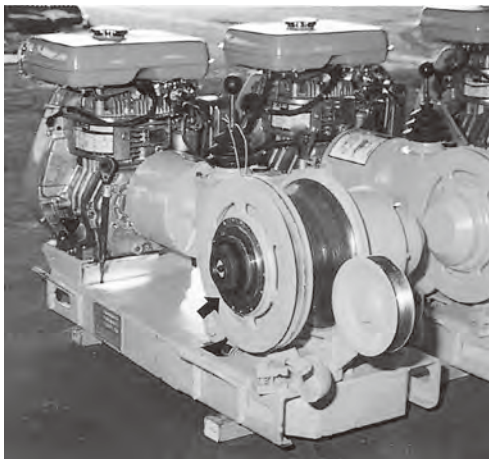



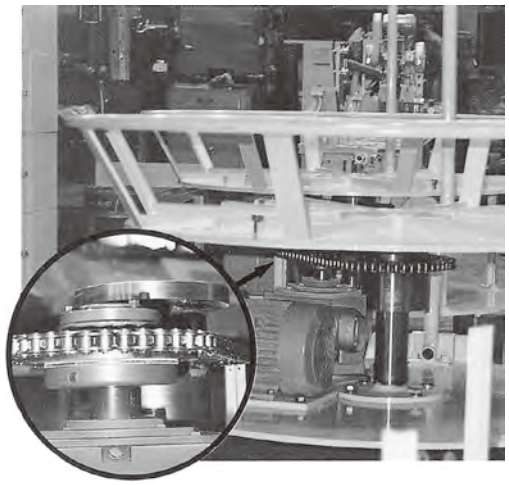

Structure

TFK20/25/35

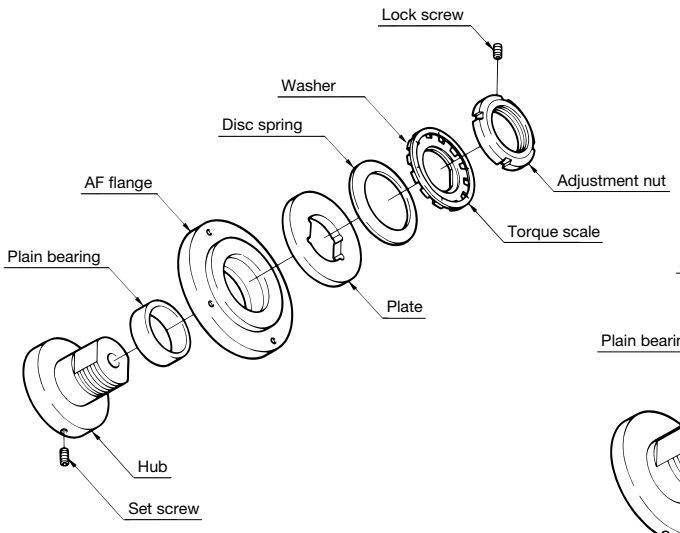

TFK50/70

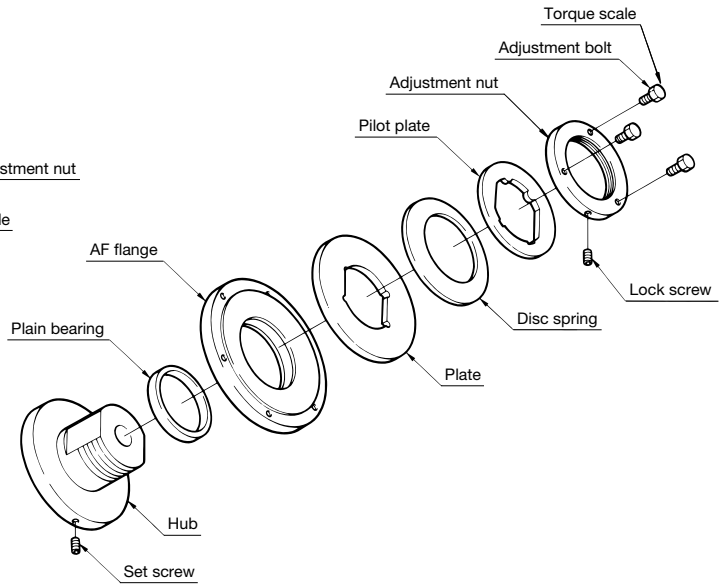

Purpose and Applicable Machinery

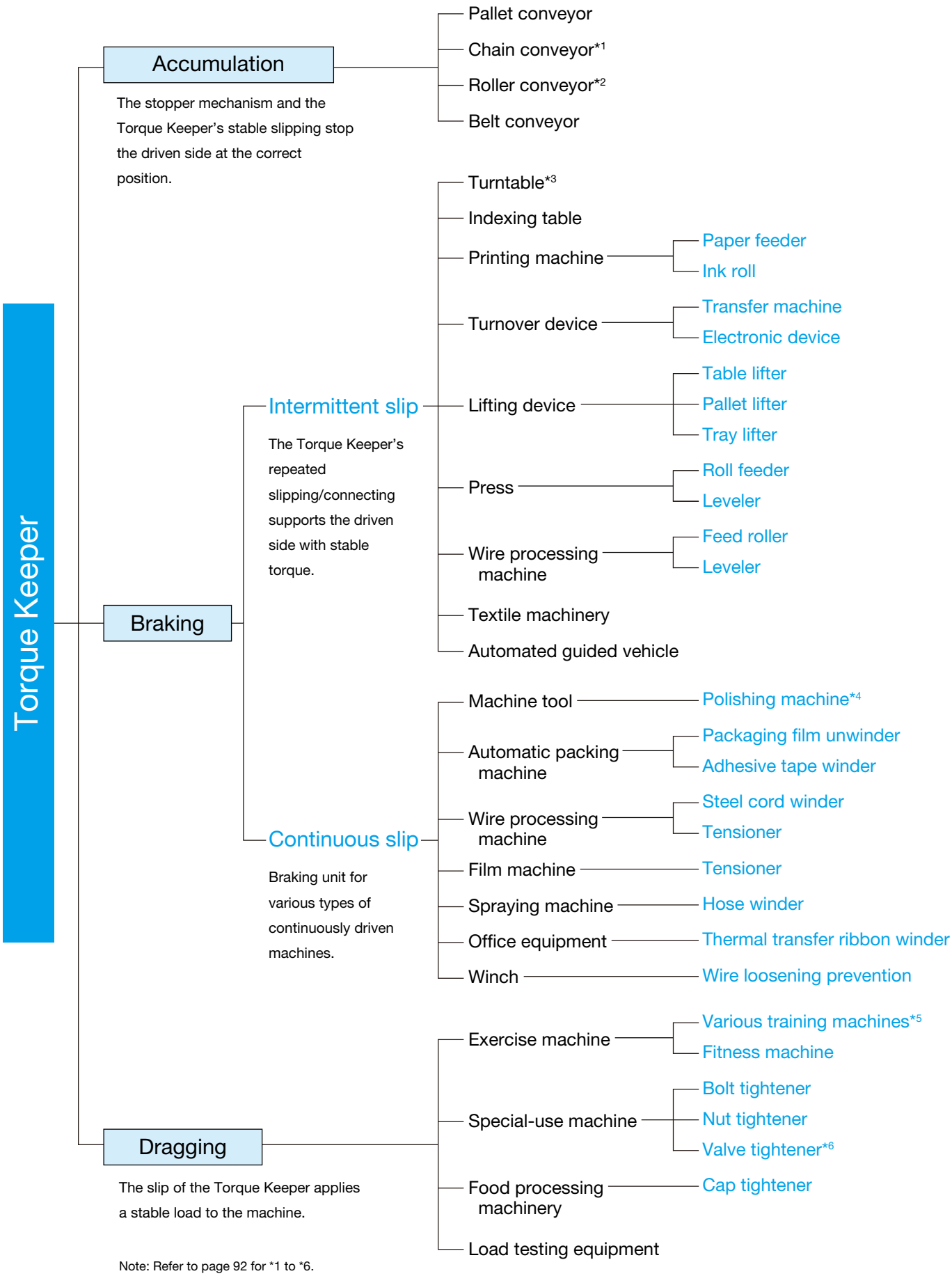

Note: Refer to page 92 for *1 to *6.

Applications

Accumulation

(For loading/unloading) *1

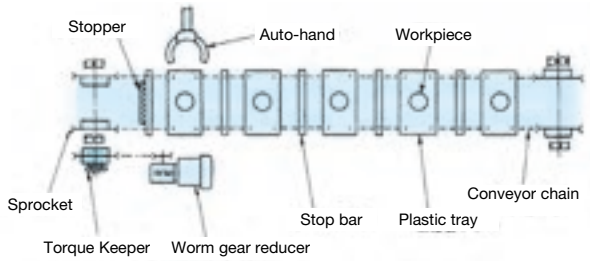

Chain conveyor

When the stop bar contacts the stopper, the Torque Keeper slips and the conveyor stops. After releasing the stopper, the Torque Keeper will be connected and the conveyor resumes operation.

(For accumulating) *2

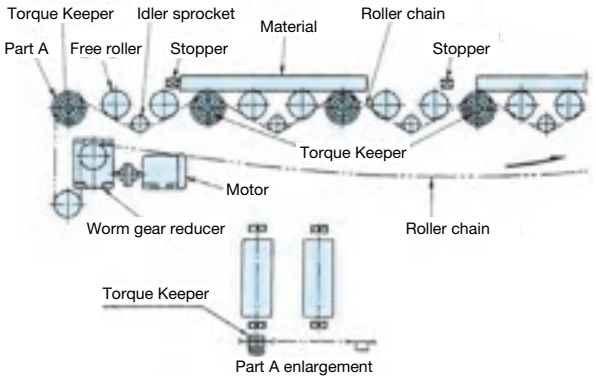

Roller conveyor

When the roller chain is moving, if the material contacts the stopper, the nearby Torque Keeper slips and the material will be stopped. After releasing the stopper, the Torque Keeper will be connected and the material will continue moving.

Braking

(Intermittent slip) *3

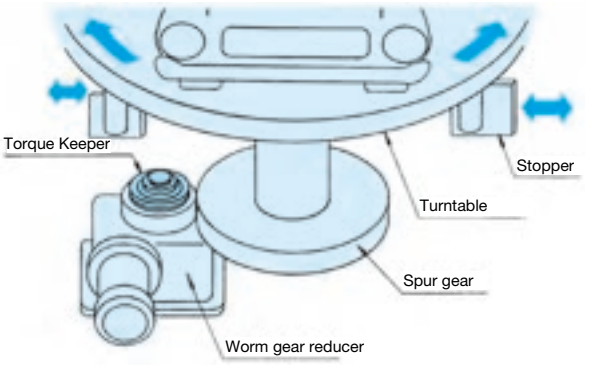

Turntable for multistory carpark

The exiting car is rotated in the exit direction on the turntable.
When the turntable comes to the correct position, it will hit the stopper and stop. The Torque Keeper then slips to protect the drive section.

(Continuous slip) *4

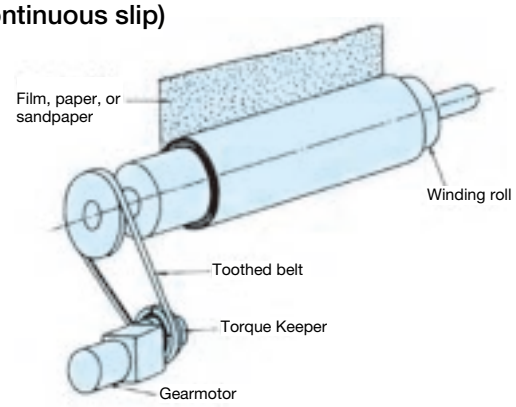

Winding of film, paper, or sandpaper

To wind up film, paper, or sandpaper the Torque Keeper slips at low speed while applying stable tension.

Dragging

(For loads) *5

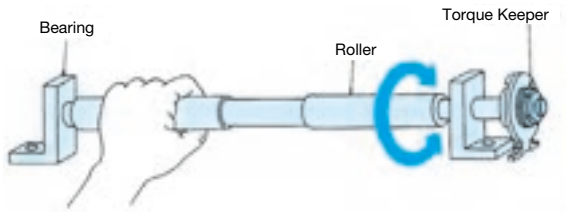

Wrist exerciser

The wrist can be exercised by gripping and rotating the roller.
The Torque Keeper's stable slipping torque applies load to the roller.

(For tightening) *6

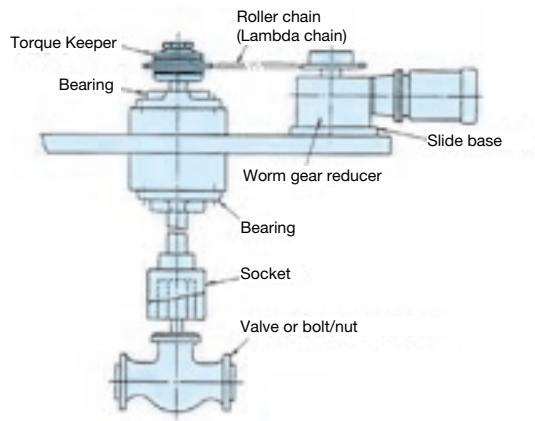

Tightening machine

The Torque Keeper's stable torque tightens the bolt, nut, or valve at a consistent torque.

TFK20/25/35

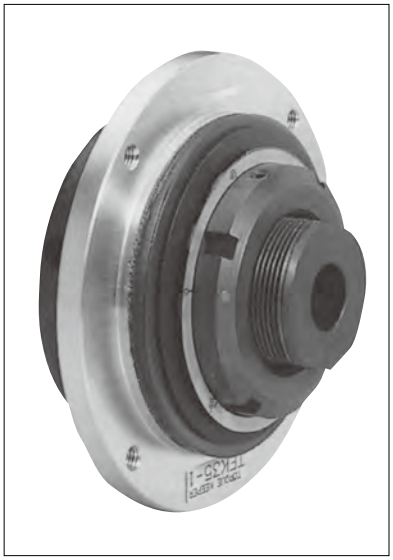

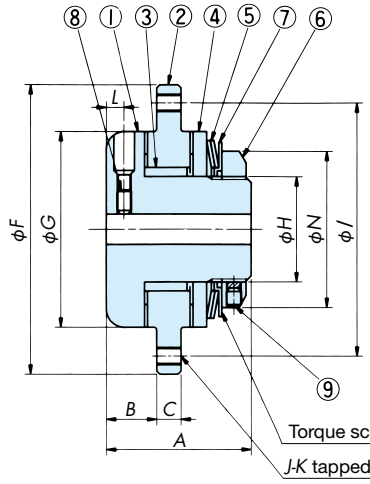

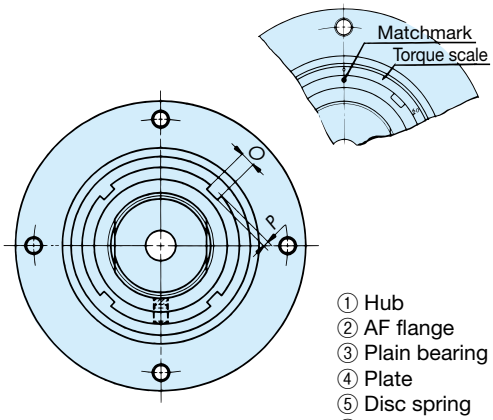

① Hub
② AF flange
③ Plain bearing
④ Plate
⑤ Disc spring
⑥ Adjustment nut
⑦ Washer
⑧ Set screw
⑨ Lock screw

TFK20-1L and TFK35-1L have a spacer between the disc spring and plate.

Unit: mm

Torque Keeper model no.	Torque range N·m	Pilot bore dia.	Min. bore dia.	Max. bore dia.	Dimensions														Mass kg
					A	B	C	F (h7)	G	H	I PCD	J-K number-dia.	L	N	O	P	Adjustment nut dia. × pitch	Set screw dia.	
TFK20-1L	0.6 to 1.1	7	9	14	37	13.3	7	84	50	24	70	4-M6	5	38	5	2	M24×1.0	M5×8	0.56
TFK20-1	1.8 to 5.8																		
TFK20-2	4.0 to 11																		
TFK25-1L	1.8 to 4.1	10	12	22	48	16.8	8	96	65	35	84	4-M6	6	52	5	2	M35×1.5	M5×8	0.76
TFK25-1	4.0 to 16																		
TFK25-2	7.9 to 32																		
TFK35-1L	5.9 to 11	17	19	25	62	19.8	8	120	89	42	108	4-M6	7	65	6	2.5	M42×1.5	M6×12	1.5
TFK35-1	12 to 44																		
TFK35-2	21 to 89																		

Note: 1. All models are pilot-bore models in stock.
2. An M5 lock screw is included.
3. Mass is based on the maximum bore diameter.

Installation

1. When installing a toothed belt pulley, sprocket, etc., fit them to the outer diameter (dimension F) of the AF flange and secure with a bolt. (Example 1)
The minimum number of sprocket teeth is on page 94. The recommended tolerance of the fit is H7 or H8.

2. When installing the torque arm, bolt it tightly to the AF flange. Also, the end of the torque arm should be supported in the rotational direction only, allowing for sufficient free movement in the axial direction. (Example 2)

Example 1

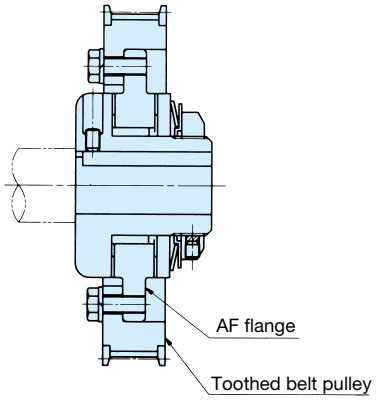

Example 2

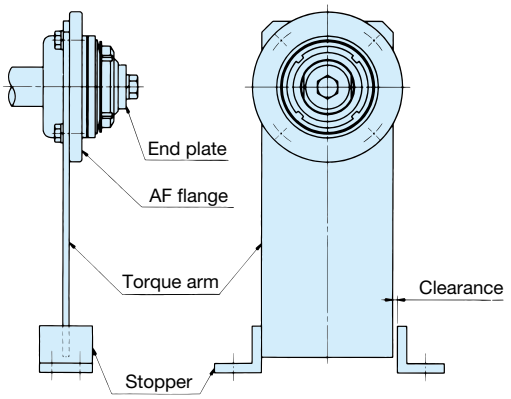

TFK50/70

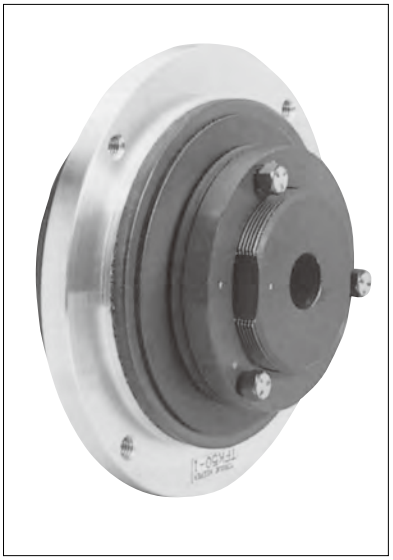

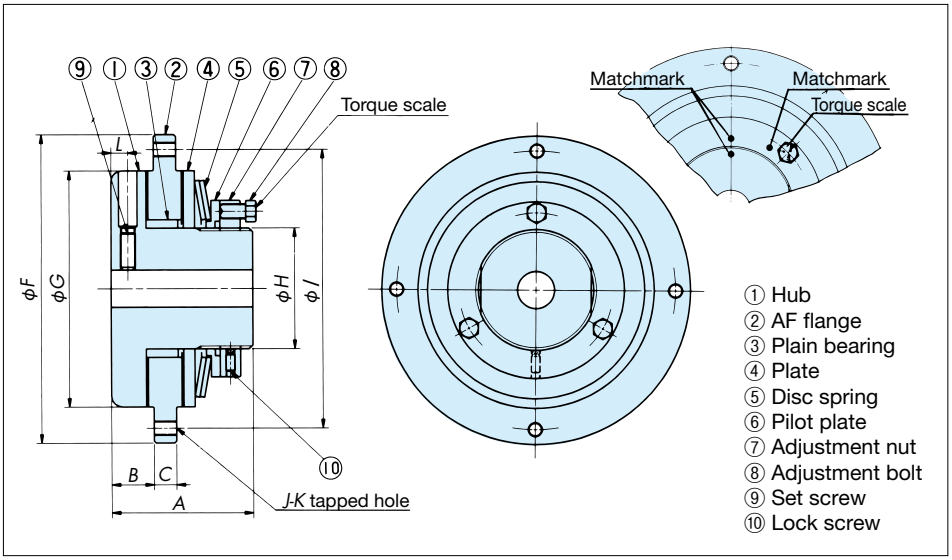

Unit: mm

Torque Keeper model no.	Torque range N·m	Pilot bore dia.	Min. bore dia.	Max. bore dia.	Dimensions												Mass kg
					A	*B*	*C*	*F* (h7)	*G*	*H*	*I* PCD	*J-K* number-dia.	*L*	Adjustment nut dia. × pitch	Adjustment bolt dia. × pitch	Set screw dia.	
TFK50-1L	12 to 29	20	22	42	76	22.8	12	166	127	65	150	4-M8	9	M65×1.5	M8×1	M8×20	4.0
TFK50-1	29 to 125																
TFK50-2	53 to 252																
TFK70-1L	30 to 70	30	32	64	98	24.8	12	216	178	95	200	6-M8	10	M95×1.5	M10×1.25	M10×20	9.4
TFK70-1	70 to 341																
TFK70-2	134 to 650																

Note: 1. All models are pilot-bore models in stock.
2. An M5 lock screw is included.
3. Mass is based on the maximum bore diameter.

Minimum Number of Sprocket Teeth

Model no.	Sprocket						
	RS35	RS40	RS50	RS60	RS80	RS100	RS120
TFK20	32	25					
TFK25	35	28	23	20	16		
TFK35		△33 (34)	28	24	19	16	14
TFK50		45	△37 (38)	△31 (32)	24	20	18
TFK70			△47 (48)	△39 (40)	△31 (32)	25	22

Note: 1. We recommend using roller chain that requires no lubrication.
2. Those marked with " △ " are not standard type A sprockets. When using a standard stock sprocket, use the number of teeth in parenthesis ( ).

Bore Finishing

Hold the hub's outer diameter with a chuck, then center and finish as shown in the diagram below.
If centering is poor, you may not be able to obtain stable slipping torque due to abnormal runout of the friction surface.

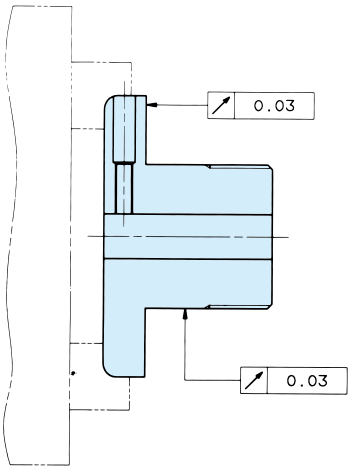

Coupling Type

■ TFK20-C / TFK25-C / TFK35-C

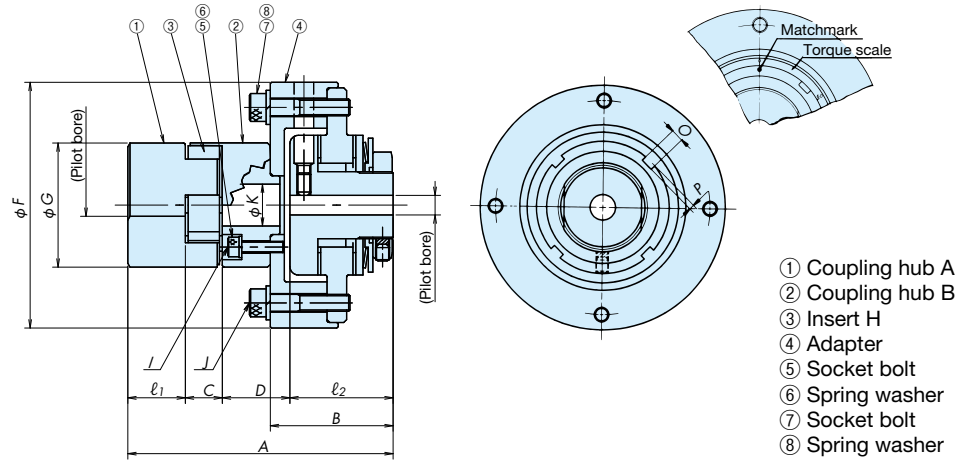

① Coupling hub A
② Coupling hub B
③ Insert H
④ Adapter
⑤ Socket bolt
⑥ Spring washer
⑦ Socket bolt
⑧ Spring washer

Unit: mm

Torque Keeper model no.	Torque range N·m	Pilot bore dia.		Min. bore dia.		Max. bore dia.		Dimensions											Mass kg
		Coupling side	Torque Keeper side	Coupling side	Torque Keeper side	Coupling side	Torque Keeper side	A	B	C	D	F	G	I Quantity/size	J Quantity/size	K	ℓ1	ℓ2	
TFK20-1LC	0.6 to 1.1	8	7	10	9	26	14	95	44	13.2	24.2	88	44.5	3-M4×16	4-M6×30	15	20.6	37	1.5
TFK20-1C	1.8 to 5.8																		
TFK20-2C	4.0 to 11																		
TFK25-1LC	1.8 to 4.1	11.1	10	13	12	29	22	106	55	13.2	24.2	102	53.6	3-M4×16	4-M6×35	23	20.6	48	2.5
TFK25-1C	4.0 to 16																		
TFK25-2C	7.9 to 32																		
TFK35-1LC	5.9 to 11	12.7	17	15	19	35	25	136	73	18.8	28.2	126	64.3	3-M6×18	4-M6×40	27	27	62	4.8
TFK35-1C	12 to 44																		
TFK35-2C	21 to 89																		

■ TFK50-C / TFK70-C

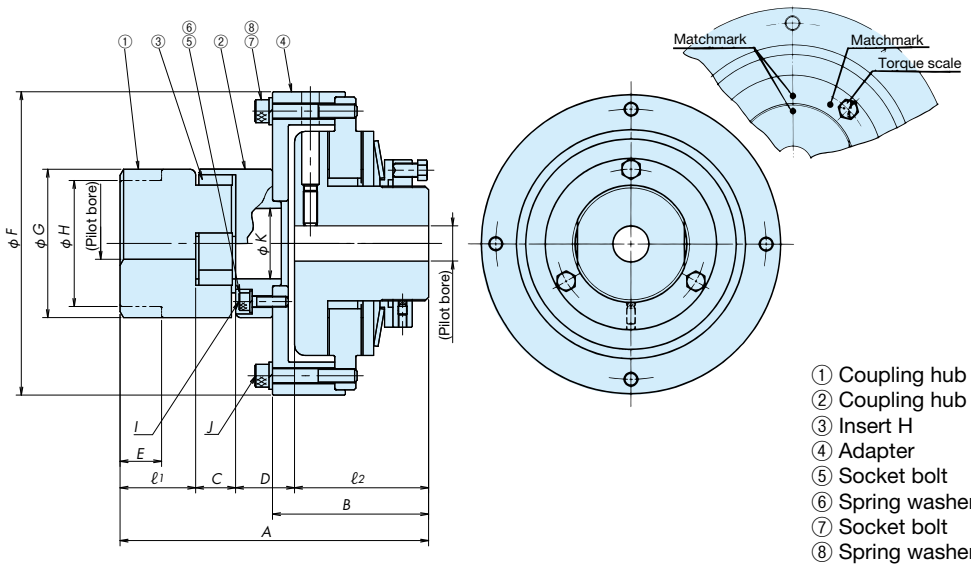

① Coupling hub A
② Coupling hub B
③ Insert H
④ Adapter
⑤ Socket bolt
⑥ Spring washer
⑦ Socket bolt
⑧ Spring washer

Unit: mm

Torque Keeper model no.	Torque range N·m	Pilot bore dia.		Min. bore dia.		Max. bore dia.		Dimensions												Mass kg
		Coupling side	Torque Keeper side	Coupling side	Torque Keeper side	Coupling side	Torque Keeper side	A	B	C	D	F	G	H	I Quantity/size	J Quantity/size	K	ℓ1	ℓ2	
TFK50-1LC	12 to 29	18	20	20	22	47	42	175	88.5	22.6	33.5	172	84.1	–	6-M6×22	4-M8×50	40	42.9	76	12
TFK50-1C	29 to 125																			
TFK50-2C	53 to 252																			
TFK70-1LC	30 to 70	19.1	30	21	32	63	64	228	113.5	26.1	40.4	222	127	107.9	6-M8×25	6-M8×55	60	63.5	98	26
TFK70-1C	70 to 341																			
TFK70-2C	134 to 650																			

New

Finished Bore Torque Keeper TFK and Torque Keeper Coupling Type TFK-C

New model numbering **As of April 2, 2018**

Model Numbering Example

■ Single-unit type

TFK35-1-TH25JD1-N25

Series	Size	No. of disc springs	Torque Keeper side	Bore tolerance	Bore dia. (1 mm increments)	Keyway tolerance	Set screw position (seen from adjustment nut side)	Torque range
TFK	20 25 35 50 70	1L: Weak spring 1: 1 spring 2: 2 springs	T	F : F7 G : G7 H : H7 J : JS7 P : P7 M : M7 N : N7 K : K7 R : R7	Size Min. to max 20: 9 to 14 25: 12 to 22 35: 19 to 25 50: 22 to 42 70: 32 to 64	J: New JIS Js9 P: New JIS P9 F: Old JIS F7 E: Old JIS E9 • Old JIS keys ϕ9 or smaller are not supported.	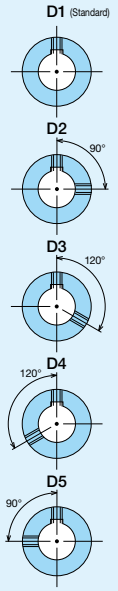	Size N·m 20: 0.6 to 11 25: 1.8 to 32 35: 5.9 to 89 50: 12 to 252 70: 30 to 650 • Torque less than 10 N·m is shown to one decimal place. • Specify torque range only if required.

■ Coupling type

TFK25-1C-TH20JD1XCH20JD5-N16

Series Size No. of disc springs	Coupling type	Torque Keeper side, bore tolerance, bore dia., keyway tolerance, set screw position	Coupling side	Bore tolerance	Bore dia. (1 mm increments)	Keyway tolerance	Set screw position (seen from hub end)	Torque range
Same as single-unit type	C	Same as single-unit type TR for pilot bore	C	F : F7 G : G7 H : H7 J : JS7 P : P7 M : M7 N : N7 K : K7 R : R7	Size Min. to max 20: 10 to 26 25: 13 to 29 35: 15 to 35 50: 21 to 58 70: 21 to 63	J: New JIS Js9 P: New JIS P9 F: Old JIS F7 E: Old JIS E9	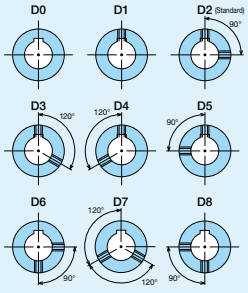	Size N·m 20: 0.6 to 11 25: 1.8 to 32 35: 5.9 to 89 50: 12 to 252 70: 30 to 650 • Torque less than 10 N·m is shown to one decimal place. • Specify torque range only if required.
				Pilot bore: R				

■ Recommended Drive Member Finishing Dimensions

When manufacturing a drive member, refer to the drawing below.

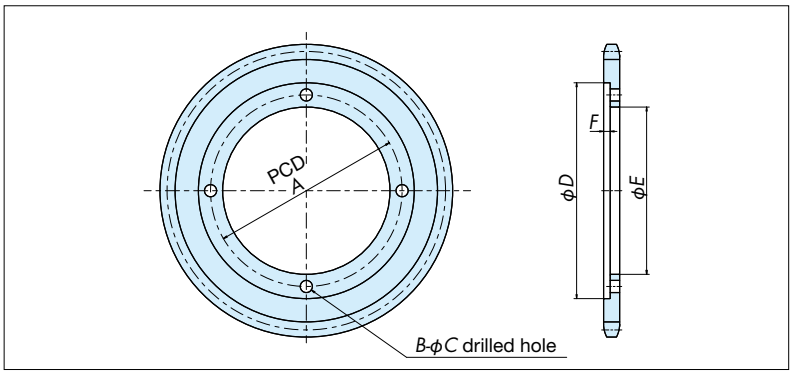

Series	Recommended sprocket finishing dimensions					
	A	*B*	*C*	*D* (H7)	*E*	*F*
TFK20	70	4	6.6	84	52	*3
TFK25	84	4	6.6	96	68	*3
TFK35	108	4	6.6	120	92	4
TFK50	150	4	9.0	166	130	5
TFK70	200	6	9.0	216	182	5

* Set *F* = 2 when using RS35.

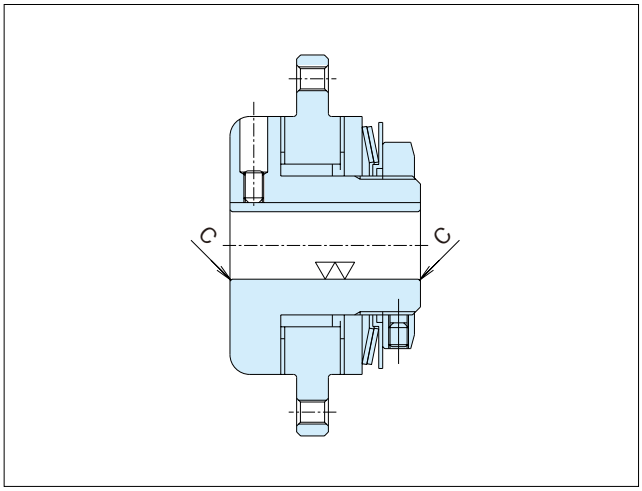

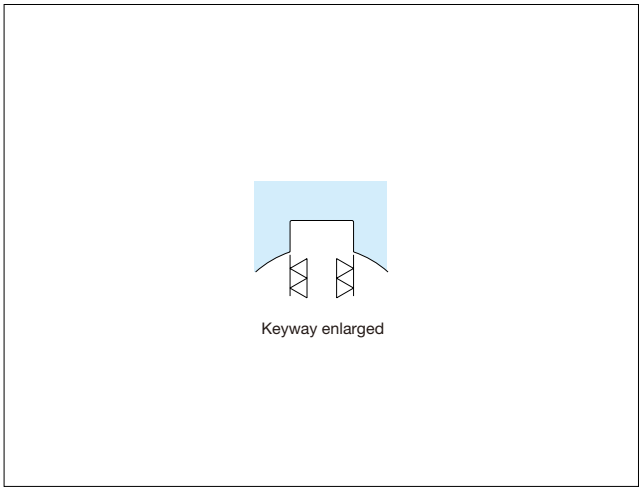

■ Chamfer and Finish

Bore dia.	Chamfer dimensions
25 or less	C0.5
50 or less	C1
125 or less	C1.5
More than 125	C2

■ Bore Diameter and Keyway Specifications

- The bore tolerance is H7.
- The keyway is new JIS (JIS B 1301-1996) normal type.
- Set screws are included.

Torque Keeper model no.		Torque Keeper side		Coupling side (coupling type only)	
		Set screw	Set screw position *(L1)*	Set screw	Set screw position *(L2)*
TFK20	**TFK20-C**	M5×8	32	M5×5	10.5
TFK25	**TFK25-C**	M5×8	42	M6×8	10.5
TFK35	**TFK35-C**	M6×12	55	M6×8	13.5
TFK50	**TFK50-C**	M8×20	69	M8×12	20.5
TFK70	**TFK70-C**	M10×20	88	M8×12	25.5

Selection

When using the Torque Keeper with human transportation or lifting devices, take the necessary precautions with equipment to avoid serious injury or death from falling objects.

1. Decide the conditions from the table below in accordance with your application (see page 91). Determine the size from the T–N curves on the next page.

Application	Conditions	Size
Accumulation	Determine the following for the Torque Keeper of each conveyor: 1. Slipping torque 2. Slip rpm 3. Slip time (conveyor stop time) 4. Connection time (conveyor drive time) 5. Operating time per day	Determine a size for which the slipping torque and rpm are within the allowable range (below the curve) on the T–N curve. If the slip time is longer than the connection time, and the operating time per day exceeds eight hours, it is recommended to operate within the ▭ area of the T–N curve.
Braking	Determine the following for the Torque Keeper of each machine: 1. Brake torque 2. rpm 3. Slip time (brake operating time) 4. Connection time (time when brake not operated) 5. Operating time per day Note: Items 3. and 4. are not necessary in case of continuous slipping.	Determine a size for which the brake torque and rpm are within the allowable range (below the curve) on the T–N curve. If the slip time is longer than the connection time, and the operating time per day exceeds eight hours, it is recommended to operate within the ▭ area of the T–N curve.
Dragging	Determine the following for the Torque Keeper of each machine: 1. Slipping torque 2. Slip rpm 3. Slip time 4. Connection time 5. Operating time per day	Determine a size for which the slipping torque and rpm are within the allowable range (below the curve) on the T–N curve. If the slip time is longer than the connection time, and the operating time per day exceeds eight hours, it is recommended to operate within the ▭ area of the T–N curve.

2. Verify that the shaft bore range of the selected Torque Keeper matches with the shaft diameter to be installed.
3. Setting the slipping torque:
   Each Torque Keeper is set at a value that is 50% of the maximum torque range (see pages 93 and 94). The torque curve is included with the unit when it is shipped. This 50% torque is called the “zero point” and it is the basis for setting the slipping torque.
   See “Handling Part 2” on page 101 for details.

Notes on Selection

1. Do not allow water or oil to get on the friction surface. This will cause the torque to drop and result in an unstable slipping torque.
2. The T–N curve is intended for use when the ambient temperature is less than 40°C. Contact a Tsubaki representative if the ambient temperature is higher.
3. Contact a Tsubaki representative when the slipping torque for the shaft diameter to be used is less than the torque range of the Torque Keeper.
4. Backlash may occur when the rotation direction is reversed. The Torque Keeper is not suitable for applications where backlash is not permitted.

T–N Curve { } is for reference.

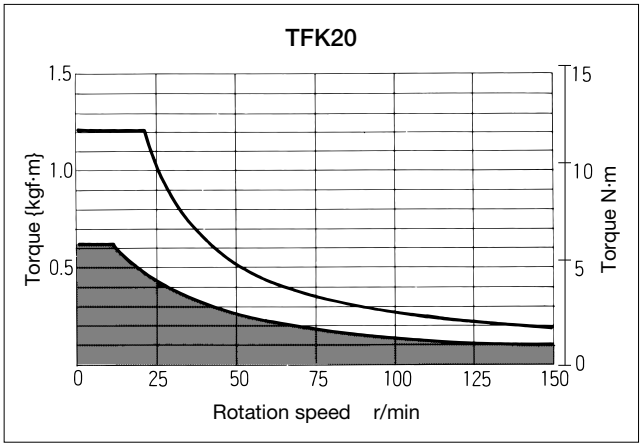

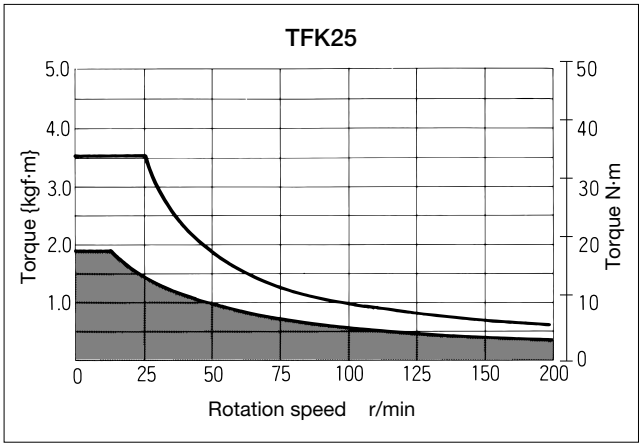

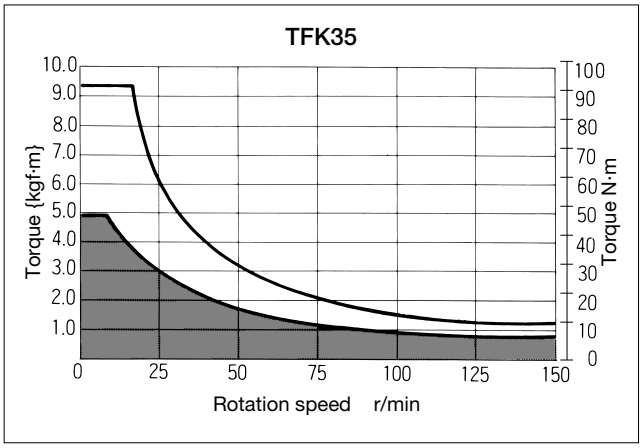

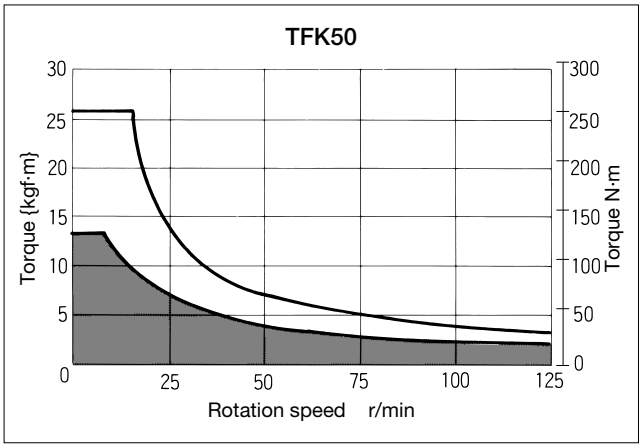

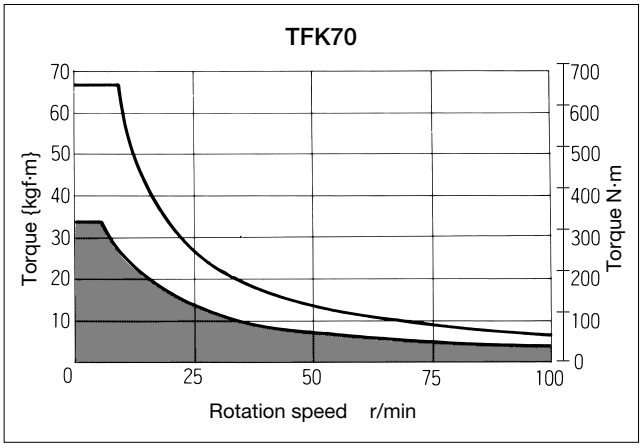

Note: T–N curves are based on the Torque Keeper's allowable temperature.
For more stable slipping torque, it is recommended to use it under conditions of 50% or less of the maximum torque. However, note that the stick-slip phenomenon may occur when the rotation speed is below 30 r/min, and the torque may not be stable. The stick-slip refers to the friction surface that stops and slips repeatedly.

T–N Curve { } is for reference.

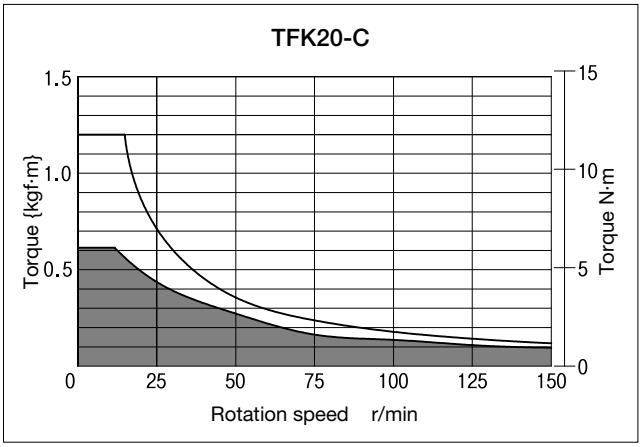

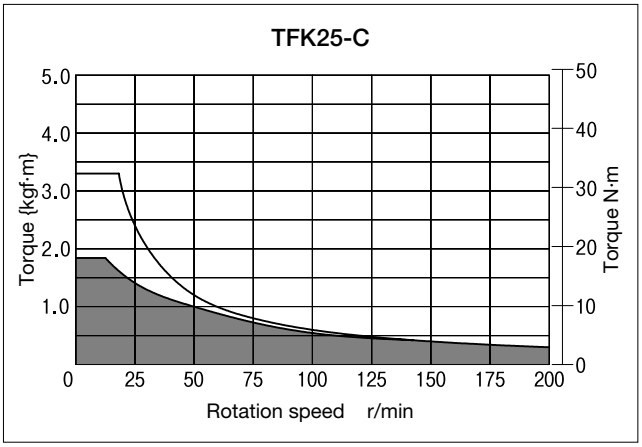

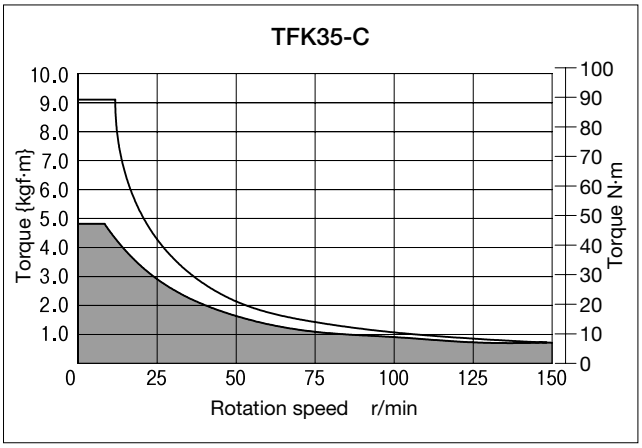

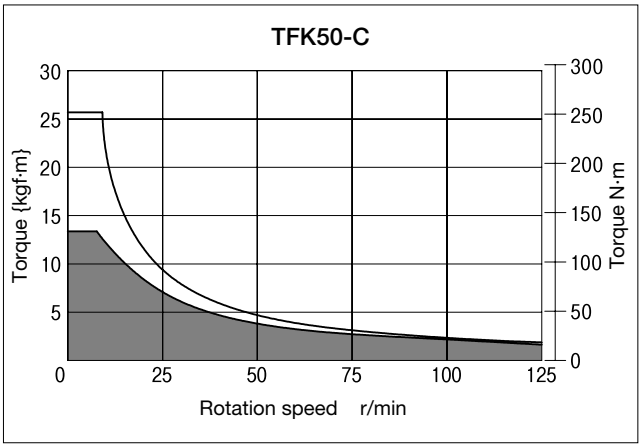

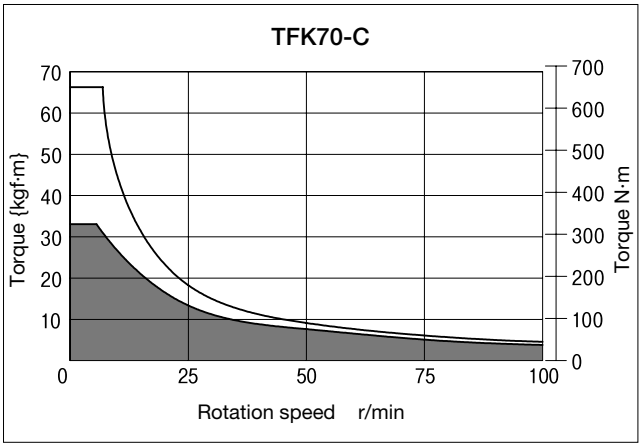

Handling Part 1

1. The Torque Keeper is shipped with pilot bores. Finish bore after disassembly. Refer to page 94 for bore finishing.
2. When disassembling two or more Torque Keepers, it is important to label the parts to avoid mixing them up. When reassembling, use the labeled parts to ensure that the Torque Keeper is reassembled correctly. If the parts are mixed up, the torque curve will not match the actual slipping torque.
3. When using the Torque Keeper with belt and chain drives, such as timing belts and roller chains, be careful not to overtighten, as this can prevent a stable slipping torque.

Handling Part 2

The Torque Keeper is set at 50% of the maximum torque range (refer to pages 93–94) and is shipped with the corresponding torque curve. This 50% torque is referred to as the “zero point,” and the slipping torque setting is based on this 0 point.
To set the slipping torque of TFK20/25/35, tighten the adjustment nut with a hook wrench. To set the slipping torque of TFK50/70, tighten the three adjustment bolts with a wrench. Refer to page 102 to determine the zero point.

Setting the Slipping Torque

TFK20/25/35

1. When the required slipping torque is above the zero point, tighten the adjustment nut to the angle required, following the provided torque curve. This operation is facilitated by the torque scale (which shows the angle) and matchmarks.
2. When the required slipping torque is below the zero point, loosen the adjustment nut beyond the point required and then tighten it to the desired angle, following the provided torque curve.
   Example: Set to a slipping torque –30° from the zero point.
   (1) Loosen the adjustment nut to –60° from the zero point.
   (2) Tighten the adjustment nut from –60° to –30°.

TFK20/25/35 Torque scale



TFK50/70

1. When the required slipping torque is over the zero point, tighten the three adjustment bolts to the angle required, following the provided torque curve. This operation is facilitated by the torque scale (which shows the angle) and matchmarks.
2. When the required slipping torque is below the zero point, loosen the three adjustment bolts beyond the point required and then tighten them to the desired angle, following the provided torque curve.
   Example: Set to a slipping torque –60° from the zero point.
   (1) Loosen the adjustment bolts to –90° from the zero point.
   (2) Tighten the adjustment bolts from –90° to –60°.

Caution: When initially setting the Torque Keeper or changing the setting during operation, it is recommended that the machine be run for two or three minutes before normal operation. This will result in a more stable slipping torque. Running-in is performed based on the set slipping torque according to the following procedure.

TFK50/70 Torque scale

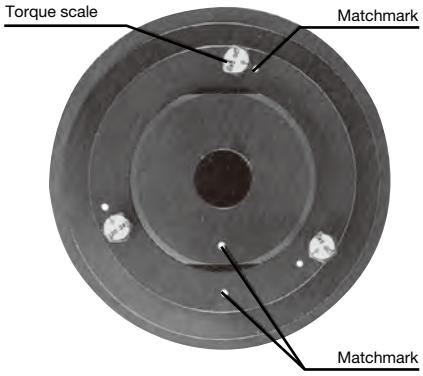

1. When the slipping torque is below the zero point:
   (1) Run in the machine at zero-point torque for two to three minutes.
   (2) Set the slipping torque as explained above and then begin normal operation.

2. When the slipping torque is above the zero point:
   (1) Set the slipping torque as explained above.
   (2) Run in the machine for two to three minutes.
   (3) Return the adjustment nut or bolts to the zero point.
   (4) Set the slipping torque again and then begin normal operation.

Torque Curve (common to coupling type)

Weak spring models

TFK20-1L, TFK25-1L, TFK35-1L

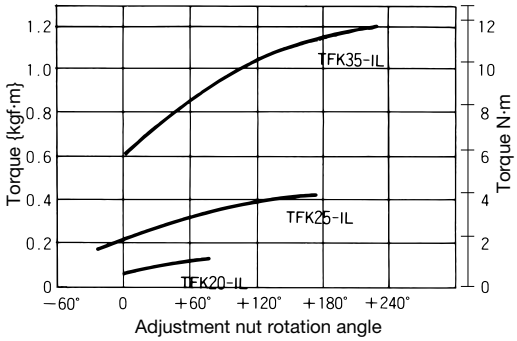

TFK50-1L, TFK70-1L

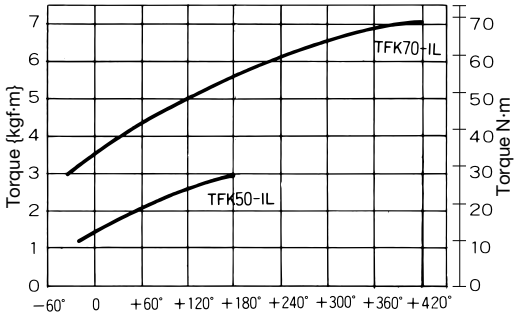

Torque Curve (common to coupling type)

Standard spring models { } is for reference.

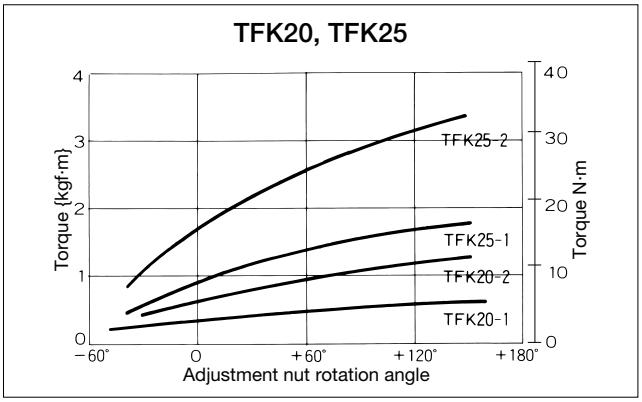

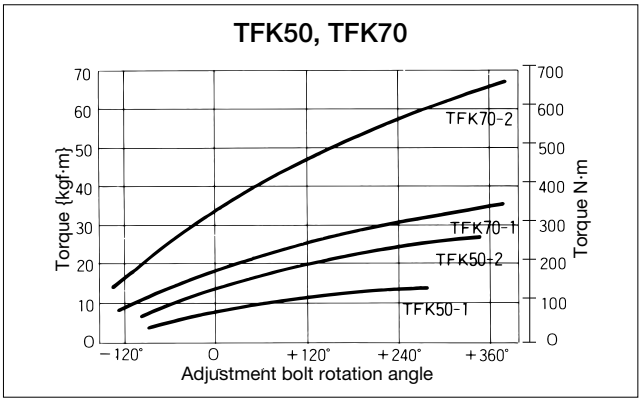

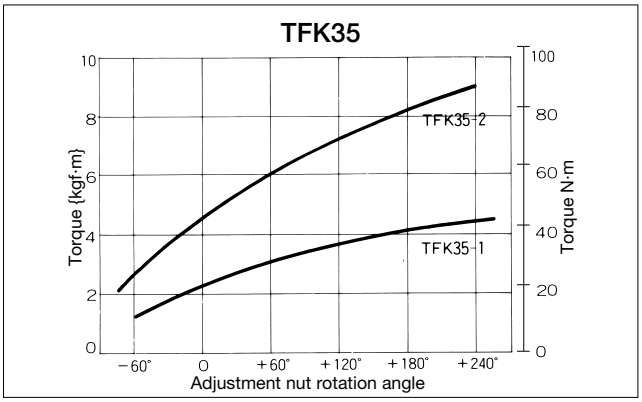

Note: 1. Indicator 0 on the torque curve shows 50% of maximum torque.
2. Each torque curve is an example. Refer to the attached torque curve of the actual unit.

Finding the Zero Point

After finishing the shaft bore and reassembling the unit, determine the zero point as explained below:

TFK20/25/35

1. During reassembly, match the “0” on the torque scale with the position of the set screw on the hub (part ⑧ on page 93). (Make sure it is not positioned 180° in the opposite direction.)
2. Hand-tighten the adjustment nut and then use a hook wrench to further tighten it until the matchmark reaches the “0” position on the torque scale.

TFK50/70

1. Tighten the adjustment nut and align it with the matchmark on the hub.
2. Hand-tighten the bolts and then use a wrench to further tighten them until the “0” position on the indicators align with the matchmarks.

Non-standard Torque Keepers

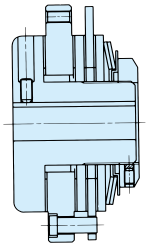

Model: TFK35-2W (multiple disc Torque Keeper)
Specifications: Shaft dia. ϕ 25
Torque range 40 to 150 N·m {4.0 to 15 kgf·m}

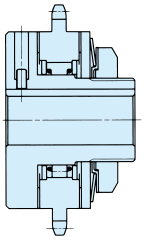

Model: TFK35LD-1 (Torque Keeper with built-in cam clutch)
Specifications: Max. bore dia. ϕ 25
Torque range 11 to 43 N·m {1.1 to 4.4 kgf·m}
Main applications: Machines that need to have bolts, nuts, or valves loosened after tightening them at a fixed torque

Note: Contact a Tsubaki representative for more information on non-standard models.

Lock Screw–Tightening Torque

Hexagon socket head set screw	Tightening torque N·m{kgf·cm}
M5	3.8 { 38.7}

Precautions

When re-tightening lock screws that had been removed, make sure to take the following precautions:

1. Confirm that the plug tip has not been detached. If the lock screw has the plug tip detached, it may damage the hub thread or get caught in the hub notch.
2. Confirm that the plug tip has not been heavily deformed. If the lock screw has a heavily deformed plug tip, it may damage the hub thread.

If 1. or 2. is found to be the case, exchange the damaged parts with new ones.

Mini Keeper MK Series

Features

Precise, lightweight, ultra-compact slip clutch and brake

Tsubaki Mini Keeper is an ultra-compact slip clutch and brake made from engineering plastics and fine chemicals. Its unique design allows a level of lightness, compactness, and high accuracy not possible with other types of devices. The Mini Keeper is ideal for braking, accumulating, and dragging applications such as OA equipment and precision machinery.



- Employs a special fine chemical on the friction surface
  - **Long life**
  - **Stable slipping torque**
  - **Constant torque repeatability**
- Superior design
  - **Easy torque adjustment**
  - **Easy-to-read torque scale**
- Full use of engineering plastic
  - **Extremely light**
  - **Extremely small**
  - **Compact**

Applications

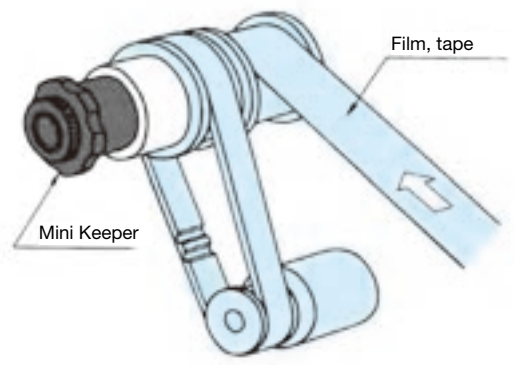

The Mini Keeper slips and maintains constant tension on the tape (or film, etc.).
It is ideal for braking in the winding and unwinding portions of machinery.

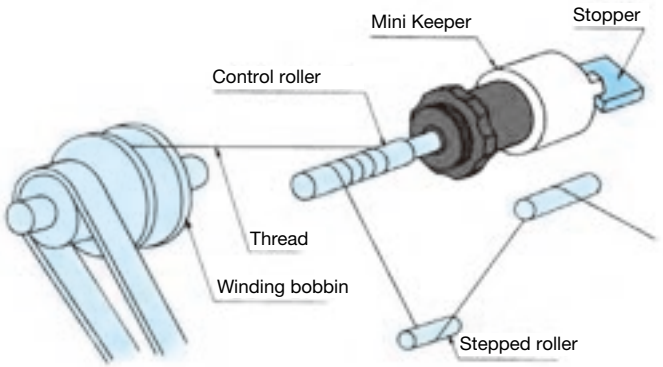

The Mini Keeper is installed on the tension control roller in front of the winding roll.
Stable slipping torque maintains stable tension on the thread to wind it up.

Other potential applications

Thermal printer	Textile machinery	Automatic packaging machine	Electronic device manufacturing equipment
Paper feeder	Wire cutter	Coil winding machine	Various robots
Plotter	Film processing equipment	Labeler	Ribbon printer
Copier	Accumulation conveyor	Barcode printer	Facsimile

And more...

Dimensions

MK08

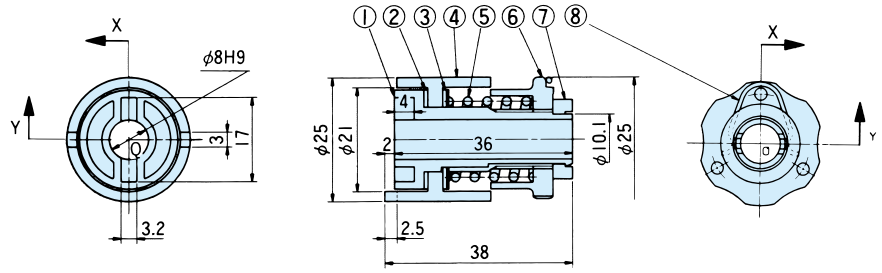

Cross section X-Q-Y

Torque range
1.96 to 9.80 N·cm
{0.2 to 1.0 kgf·cm}
Max. slip rpm
Refer to the T–N curve on p106.
Mass 18 g

① Hub
② Friction facing A
③ Friction facing B
④ Flange
⑤ Coil spring
⑥ Adjustment nut
⑦ Stop collar
⑧ Anti-rotation clip

MK10

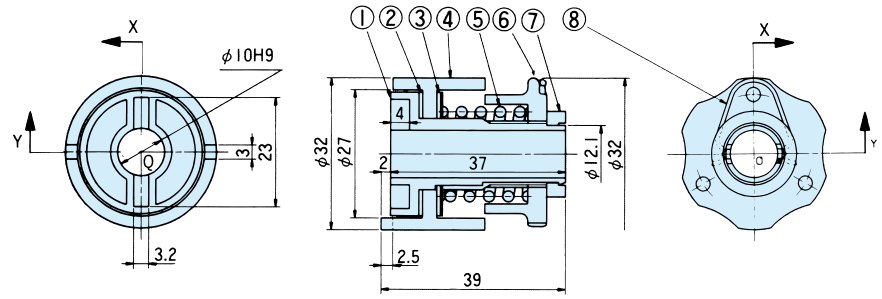

Cross section X-Q-Y

Torque range
4.90 to 1.96 N·cm
{0.5 to 2.0 kgf·cm}
Max. slip rpm
Refer to the T–N curve on p106.
Mass 30 g

① Hub
② Friction facing A
③ Friction facing B
④ Flange
⑤ Coil spring
⑥ Adjustment nut
⑦ Stop collar
⑧ Anti-rotation clip

MK12

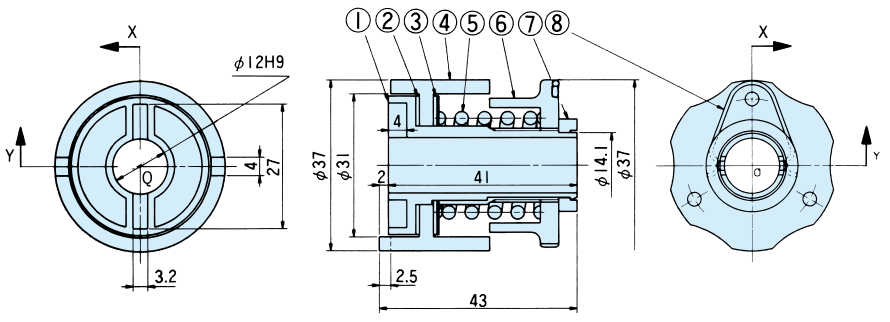

Cross section X-Q-Y

Torque range
10.8 to 39.2 N·cm
{1.1 to 4.0 kgf·cm}
Max. slip rpm
Refer to the T–N curve on p106.
Mass 46 g

① Hub
② Friction facing A
③ Friction facing B
④ Flange
⑤ Coil spring
⑥ Adjustment nut
⑦ Stop collar
⑧ Anti-rotation clip

Note: All models are in stock.

Torque curves

The percentage axis indicates the percentage of maximum torque.

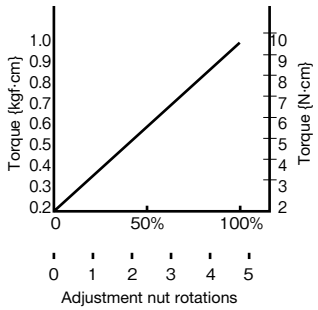

The percentage axis indicates the percentage of maximum torque.

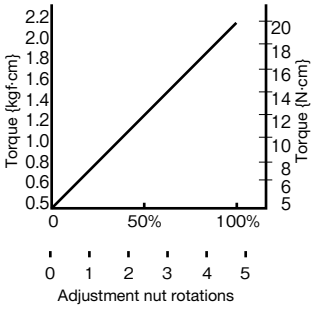

The percentage axis indicates the percentage of maximum torque.

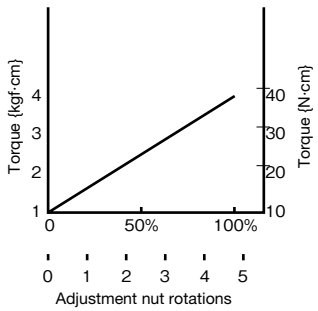

Selection

When using the Mini Keeper with human transportation or lifting devices, take the necessary precautions with equipment to avoid serious injury or death from falling objects.
Determine a size for which the torque and slip rpm is within the ■ area of the T–N curve below.

- The T–N curve shows the maximum torque that can be generated without overheating when the motor is slipping continuously. If the slip time is short and there is a long interval between slips, it is possible to use the motor beyond the T–N curve. In this case, consult with a Tsubaki representative.
- Contact a Tsubaki representative for more information on non-standard models.
- Note that a stick-slip phenomenon may occur at speeds of 30 r/min or less, causing unstable torque due to repeated slipping and stopping of a friction surface.

T–N Curve

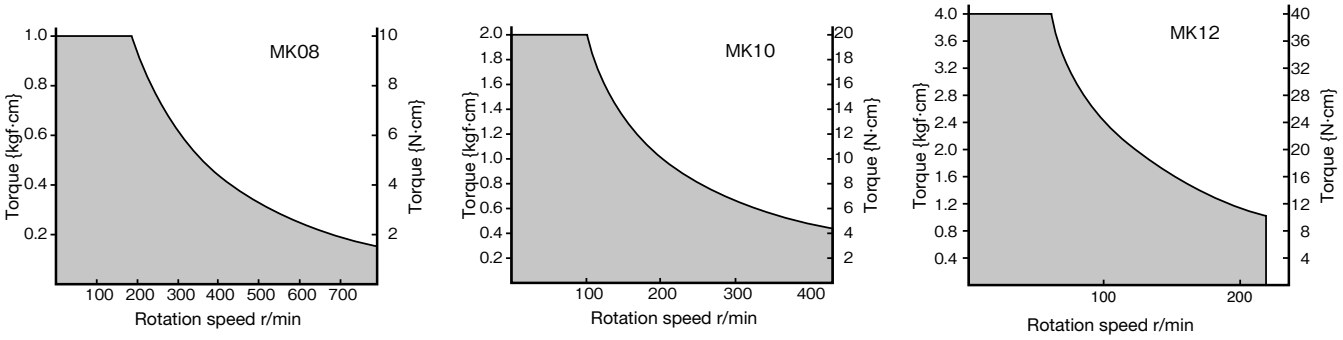

The T–N curve is intended for use when the ambient temperature is less than 35°C.
Contact a Tsubaki representative if the ambient temperature is higher.

Handling

Installing to the shaft

1. The shaft bore of the Mini Keeper is already finished. A tolerance for the installation shaft diameter of h7 or h8 is recommended.
2. Use the pin pocket (groove) on the end face of the hub to connect the Mini Keeper to the shaft. Insert the pin into the shaft, and then set them in the pin pocket as shown below. The clearance should be about 0.5 mm.

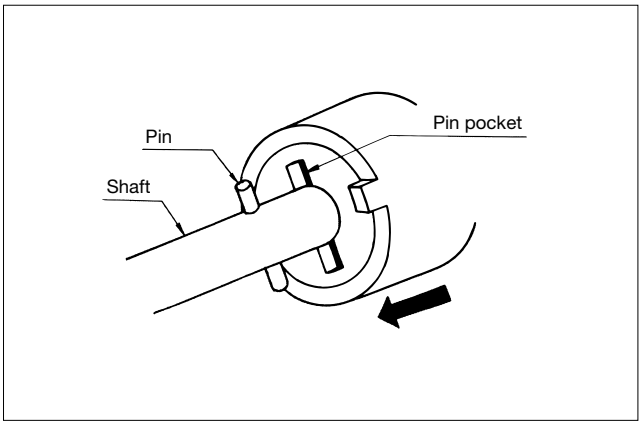

Make sure to set a clearance between the pin end face, side, and pin pocket. Pin bore machining differs depending on the sort of pin.

Installing onto a driven member

1. Use the flange jaw to attach the Mini Keeper to a driven member (gear, pulley, etc.).

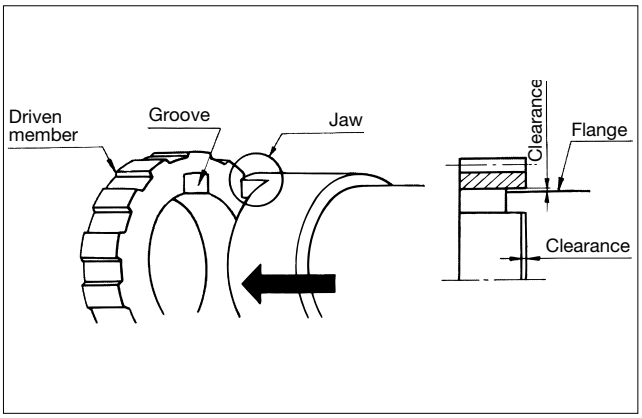

Cut a groove into the end face of the driven member, and slide the jaw into it. At this time, be sure to allow a clearance so that thrust and radial loads do not act on the flange end face including the jaw. The clearance should be about 0.5 mm.

Torque Setting

1. The Mini Keeper is shipped at a zero-point (minimum torque) setting. The scale on the outer circumference of the adjustment nut should be aligned with the mark as shown below.

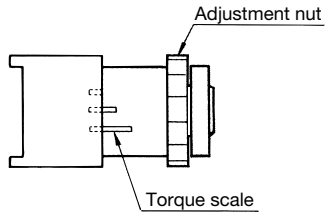

(0 points, min. torque)

2. Set the torque by tightening the adjustment nut. Refer to the torque curve on page 105. Use the torque scale as a guide for setting the torque as shown below.

Be sure to check with the actual equipment to confirm that the set torque is appropriate.

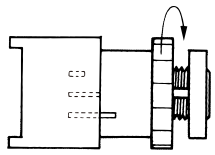

(50% of maximum torque)

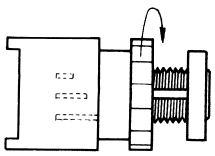

(100% of maximum torque)

3. After setting the torque, fix the adjustment nut to stop it from rotating. Simply insert the supplied anti-rotation clip between the adjusting nut and the stop collar as shown below.
Make sure that the protrusions of the anti-rotation clip are securely positioned in the hub grooves on both sides. The anti-rotation clip is placed against the stop button (convex part) of the adjusting nut to prevent rotation.

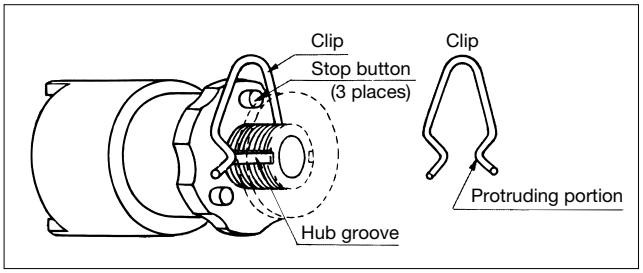

Note: 1. Water, oil, or other contaminants on the friction surface can cause torque irregularities and prevent stable slipping torque.
2. The Mini Keeper is intended for use when the ambient temperature is less than 35°C. Contact a Tsubaki representative if the ambient temperature is higher.

Installation Example

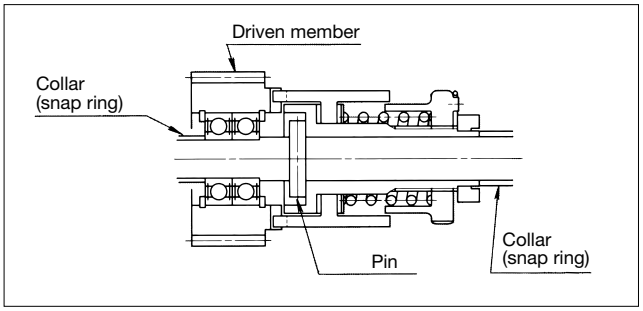

For Safe Use

Warning

Observe the following points to prevent hazardous situations.

- Begin inspection and maintenance after verifying that no load or rotational force is being applied to the equipment.
- Check the operation of the device periodically so that it can be sure to function properly when overload occurs.
- Comply with the 2-1-1 General Standards of the Japanese Ordinance on Industrial Safety and Health or the rules and regulations concerning occupational safety and health in your region/country.
- When performing maintenance or inspections:
  1) Wear proper work clothes and protective equipment (safety devices, gloves, shoes, etc.).
  2) Make sure the power is switched off, and take the necessary measures to ensure the power is not turned back on.
  3) Follow the instruction manual.
  4) Wire according to electrical installation standards, company rules, and other laws and regulations. Take note of the cautions in the instruction manual, which explain installation direction, clearance, and environmental conditions. Make sure to ground the device to prevent electrical shock and to improve noise resistance.
- When using with lifting equipment or when load is constantly applied to the equipment, take the necessary precautions to prevent accidents from falling objects resulting from malfunction of the product.

Caution

Observe the following points to prevent accidents.

- The strength of the equipment should be designed to withstand the load or rotational force when the device is activated due to overload.
- Wear damage may occur depending on the number and frequency of activations. Following the instruction manual, check the functions and operations periodically. If something is not functioning properly, contact the distributor for repair.
- The product information given in this catalog is mainly for selection purposes. Thoroughly read the instruction manual before actually using the product, and use the product properly.
- The product comes with an instruction manual. If you do not have the instruction manual, contact the distributor where you purchased the product or a Tsubaki representative with the product name, series name, and model number to receive the appropriate manual.
- Always ensure that the final customer receives the instruction manual.

Warranty

TSUBAKIMOTO CHAIN CO.: hereinafter referred to as “Seller”
Customer: hereinafter referred to as “Buyer”
Goods sold or supplied by Seller to Buyer: hereinafter referred to as “Goods”

1. Warranty period without charge

18 months effective the date of shipment or 12 months effective the first use of Goods, including installation of Goods to Buyer’s equipment or machines - whichever comes first.

2. Warranty coverage

Should any damage or problem with the Goods arise within the warranty period, given that the Goods were operated and maintained under instructions provided in the manual, Seller would repair and replace at no charge once the Goods are returned to Seller. The following are excluded from the warranty.

1) Any costs related to removing Goods from the Buyer’s equipment or machines to repair or replace parts.
2) Costs to transport Buyer’s equipment or machines to the Buyer’s repair shop.
3) Costs to reimburse any profit loss due to any repair or damage and consequential losses caused by the Buyer.

3. Warranty with charge

Seller will charge any investigation and repair of Goods caused by:

1) Improper installation by failing to follow the instruction manual.
2) Insufficient maintenance or improper operation by the Buyer.
3) Incorrect installation of Goods to other equipment or machines.
4) Any modifications or alterations of Goods by the Buyer.
5) Any repair by engineers other than the Seller or those designated by the Seller.
6) Operation in an inappropriate environment not specified in the manual.
7) Force Majeure or forces beyond the Seller’s control such as natural disasters and injustice done by a third party.
8) Secondary damage or problem incurred by the Buyer’s equipment or machines.
9) Defected parts supplied, or specified by the Buyer.
10) Incorrect wiring or parameter setting by the Buyer.
11) The end of life cycle of the Goods under normal usage.
12) Loss or damage not liable to the Seller.

4. Dispatch service

Service to dispatch a Seller’s engineer to investigate, adjust or trial test Seller’s Goods is at the Buyer’s expense.

5. Disclaimer

1) In our constant efforts to improve, TSUBAKIMOTO CHAIN may change the contents of this document without notice.
2) Considerable effort has been made to ensure that the contents of this document are free from errors. However, TSUBAKIMOTO CHAIN makes no warranties with respect to the accuracy of information described herein. In the meantime, we would appreciate comments or reports on any inaccuracies or omissions found in this document to help us make timely amendments as necessary. Your cooperation is greatly appreciated.

The logos or product names in this catalog are either trademarks or registered trademarks of Tsubakimoto Chain Co. or the Tsubaki Group in Japan and other countries.

TSUBAKIMOTO CHAIN CO.

Japan	Tsubakimoto Chain Co.	https://tsubakimoto.com/

Global Group Companies

AMERICAS

United States	U.S. Tsubaki Power Transmission, LLC	https://www.ustsubaki.com/
Brazil	Tsubaki Brasil Equipamentos Industriais Ltda.	https://tsubaki.ind.br/
Canada	Tsubaki of Canada Limited	https://tsubaki.ca/

EUROPE

Netherlands	Tsubakimoto Europe B.V.	https://tsubaki.eu/
France	Kabelschlepp France S.A.R.L.	https://tsubaki-kabelschlepp.com/fr-fr/
Germany	Tsubaki Deutschland GmbH	https://tsubaki.de/
	Tsubaki Kabelschlepp GmbH	https://tsubaki-kabelschlepp.com/de-de/
Italy	Kabelschlepp Italia S.R.L.	https://tsubaki-kabelschlepp.com/it-it/
Spain	Tsubaki Ibérica Power Transmission S.L.	https://tsubaki.es/
United Kingdom	Tsubakimoto UK Ltd.	https://tsubaki.eu/
Slovakia	Kabelschlepp-Systemtechnik, spol. s.r.o.	https://tsubaki-kabelschlepp.com/sk-sk/
Poland	Kabelschlepp Sp. z o.o.	https://kabelschlepp.pl/

INDIAN OCEAN RIM

Singapore	Tsubakimoto Singapore Pte. Ltd.	https://tsubaki.sg/
Australia	Tsubaki Australia Pty. Limited	https://tsubaki.com.au/
India	Tsubaki India Power Transmission Private Limited	https://en.tsubaki.in/
Indonesia	PT. Tsubaki Indonesia Trading	https://tsubaki.id/
Malaysia	Tsubaki Power Transmission (Malaysia) Sdn. Bhd.	https://en.tsubaki.my/
New Zealand	Tsubaki Australia Pty. Limited - New Zealand Branch	https://tsubaki.com.au/
Philippines	Tsubakimoto Philippines Corporation	https://en.tsubaki.ph/
Thailand	Tsubakimoto (Thailand) Co., Ltd.	https://tsubaki.co.th/
Vietnam	Tsubakimoto Vietnam Co., Ltd.	https://tsubaki.net.vn/

EAST ASIA

Republic of Korea	Tsubakimoto Korea Co., Ltd.	https://tsubakimoto-tck.co.kr/
Taiwan	Taiwan Tsubakimoto Trading Co., Ltd.	https://tsubakimoto.tw/

CHINA

China	Tsubakimoto Chain (Shanghai) Co., Ltd.	https://www.tsubaki-sh.cn/

Note: In accordance with the policy of TSUBAKIMOTO CHAIN CO. to constantly improve its products, the specifications in this catalog are subject to change without notice.
Catalog No. ME2441 ©2024/4 TSUBAKIMOTO CHAIN CO. Printed in Japan Ⓜ